REVISIONS											
LTR	ZONE	DESCRIPTION	DWN	CHK	P-ENG	CONFIG	ME	STRS	MATL	PROJ	QA	RELEASE DATE
A		INITIAL RELEASE										

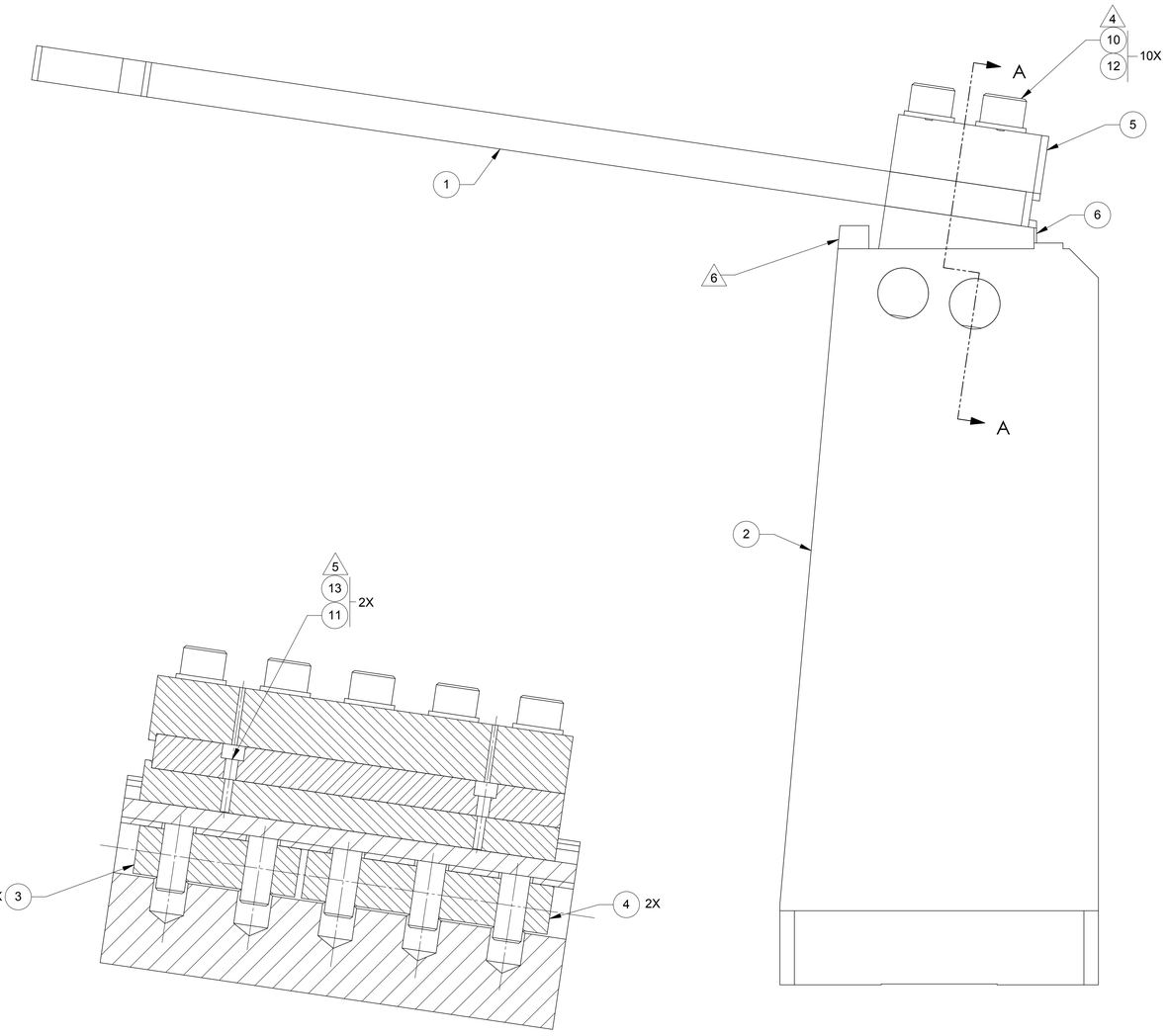

SECTION A-A
SCALE 1 : 1

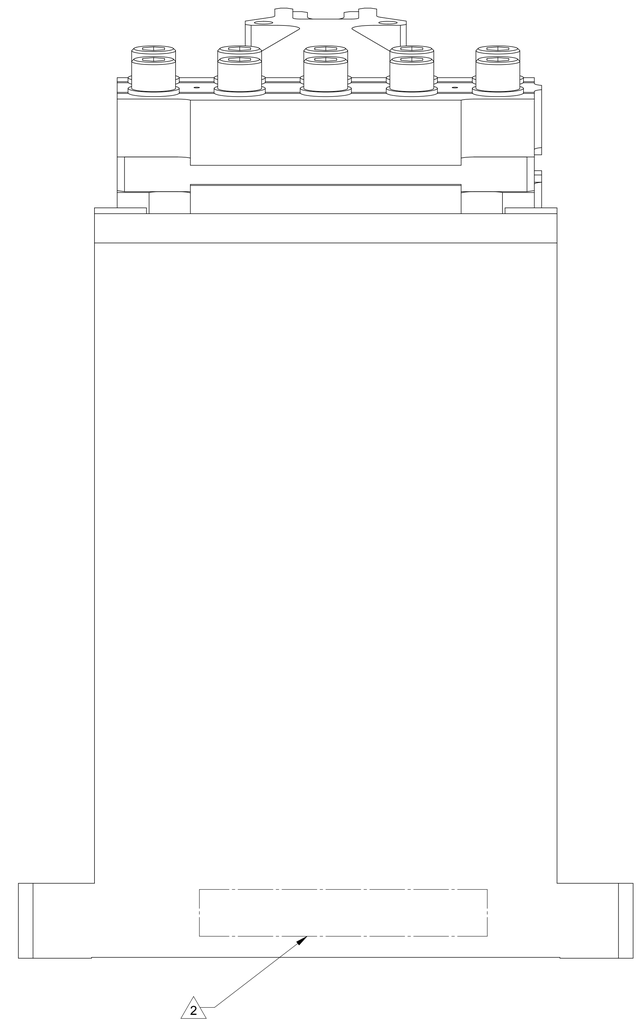

NOTES: UNLESS OTHERWISE SPECIFIED.

1. ALL PARTS SHALL BE MANUFACTURED IN ACCORDANCE WITH ASI SPECIFICATION 20008225 (LIGO E048225).

2. MARK ASSY AND SERIAL NUMBER IN LOCATION APPROXIMATELY AS SHOWN USING 0.13-INCH HIGH CHARACTERS IN ACCORDANCE WITH 20006686, TYPE I, CLASSES 4, 5, OR 6. SERIAL NUMBERS START AT 001 FOR FIRST PART AND PROCEED CONSECUTIVELY.

3. RECORD WEIGHT TO NEAREST 0.1 LB ON INSPECTION REPORT AFTER FINAL ASSEMBLY. ESTIMATED WEIGHT IS: 72.8 LBS.

4. TORQUE BOLTS TO 110 FT-LBS.

5. TORQUE BOLTS TO 30 IN-LBS.

6. TWO .190-24 UNC HOLES ARE PROVIDED IN ITEM 2, POST, FOR INSTALLING TWO FASTENERS TO SERVED AS ASSEMBLY AIDS THAT HOLD ITEM 6, SHIM AGAINST BACKSTOP FEATURE MACHINED INTO ITEM 2. THESE FASTENERS SHALL HAVE SMOOTH, NON-MARRING ENDS AND SHALL BE REMOVED BEFORE NEXT ASSEMBLY 20007970. TORQUE FASTENERS TO 10 IN-LBS MAX.

7. BOLT TORQUING PROCEDURE SHALL ENSURE THAT THE SPECIFIED TORQUE IS APPLIED WITHIN A TOLERANCE OF +5% / -10%

8. RANGE OF ADJUSTMENT OF ITEM 6, BLADE SPRING SHIM, SHALL BE RESTRICTED BY EITHER OF THE FOLLOWING CONDITIONS:
   a. ENGAGMENT OF ITEM 10, BOLT SHALL BE 8.5 FULL THREADS MINIMUM.
   b. ANGLE OF ITEM 6, BLADE SPRING SHIM, SHALL BE 11 DEGREES MAXIMUM.

9. ALL SCREWS SHALL BE SILVER PLATED. DIMENSIONAL TOLERANCES PER UNC/UNF-2A APPLY AFTER PLATING.

10. SOURCE OF SUPPLY: U-C COMPONENTS, INC.
MORGAN HILL, CALIFORNIA 95037

THIS DOCUMENT MAY CONTAIN ITAR CONTROLLED INFORMATION AND/OR COMMERCE CONTROLLED INFORMATION EXPORT RESTRICTIONS MAY APPLY

QTY REQD	-1	ITEM NO	REF DES	CAGE NO	PART OR IDENTIFYING NO	NOMENCLATURE OR DESCRIPTION	SPECIFICATION	MATERIAL OR NOTE	ZONE
10	2	13			WFV-10	WASHER, FLAT, VENTED	.195 ID, .354 OD X .032 THK	18-8 CRES	
	10	12			NAS1587-8C	WASHER, C'SUNK	.515 ID, .875 OD X .078 THK	321 CRES	
10	2	11			C-2412-A	SCREW, SHC, VENTED	.190-24 UNC X .750 L	18-8 CRES	
	10	10			NAS1352N8-60S	SCREW, HEX HEAD	.500-13 UNC X 3.750 L	A286 CRES	
		9							
		8							
		7							
	1	6			20007885-1	SHIM, BLADE SPRING			
	1	5			20007884-1	PLATE, BLADE SPRING CAP			
	2	4			20007883-3	BAR, BARREL NUT, 3 HOLE			
	2	3			20007883-2	BAR, BARREL NUT, 2 HOLE			
	1	2			20007882-1	POST, BLADE SPRING			
	1	1			20007879-1	SPRING, STAGE 1 TO 2			

PARTS LIST

CONTRACT NO

20007970 | 1388
NEXT ASSEMBLY | PROJECT CODE
APPLICATION

UNLESS OTHERWISE SPECIFIED
DIMENSIONS ARE IN INCHES
TOLERANCES
DECIMALS .XX ± .03 .XXX ± .010
ANGLES ± 1/2°
MACHINE FINISH
DO NOT SCALE DRAWING
INTERPRET DWG PER ASME Y14.5M - 1994
MATERIAL
SEE PARTS LIST

RELEASED
3/4/2005
THIS DRAWING IS RELEASED AND NO FURTHER CONFIGURATION CONTROL IS NEEDED UNLESS RE-RELEASED

DWN KEVIN J SPINK 12/02/04
PROJ ENGR
STRS
CHK
MATL
CONFIG
PROJ
ME
QA

FILE ATTACHMENTS
20007878.x_t

ALLIANCE SPACESYSTEMS, INC.
1250 Lincoln Ave., Suite 100
Pasadena, CA 91103

BLADE SPRING ASSY
STAGE 0-1
LIGO D047878-A

SIZE	CAGE CODE		REV
E	1KNU9	20007878	A
SCALE 1:1		UNCLASSIFIED	SHEET 1 OF 1

REV 7/04