REVISIONS												
LTR	ZONE	DESCRIPTION	DWN	CHK	ENGR	STRESS	MATL	THRM	ME	PROJ	QA	RELEASE DATE
A		INITIAL RELEASE										

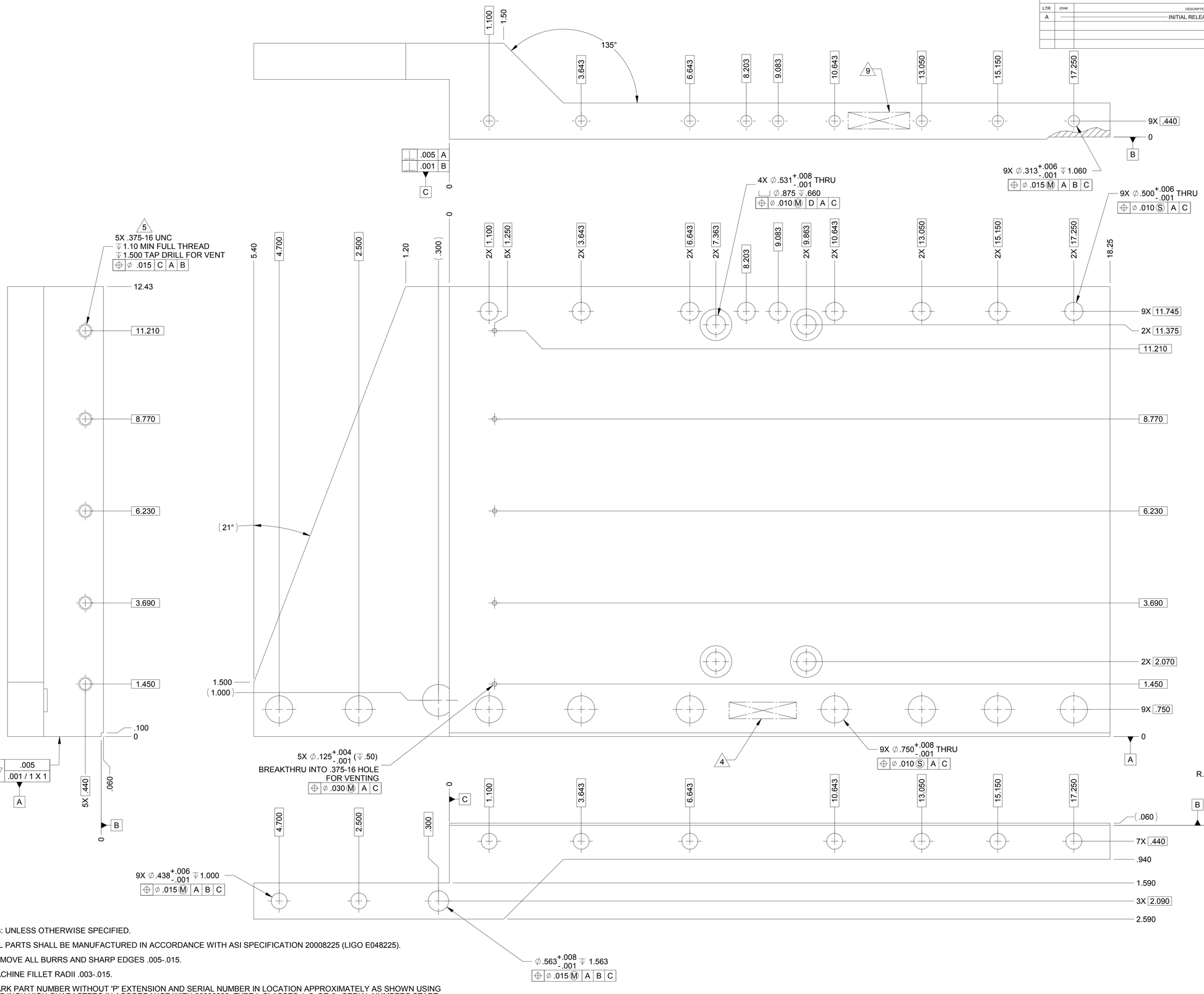

NOTES: UNLESS OTHERWISE SPECIFIED.

1. ALL PARTS SHALL BE MANUFACTURED IN ACCORDANCE WITH ASI SPECIFICATION 20008225 (LIGO E048225).
2. REMOVE ALL BURRS AND SHARP EDGES .005-.015.
3. MACHINE FILLET RADII .003-.015.
4. MARK PART NUMBER WITHOUT 'P' EXTENSION AND SERIAL NUMBER IN LOCATION APPROXIMATELY AS SHOWN USING 0.07-INCH HIGH CHARACTERS IN ACCORDANCE WITH 20006686, TYPE I, CLASSES 4, 5, OR 6. SERIAL NUMBERS START AT 001 FOR FIRST PART AND PROCEED CONSECUTIVELY. PARTS TOO SMALL TO MARK SHALL BE IDENTIFIED IN ACCORDANCE WITH 20006686, TYPE II.
5. THREADED HOLES SHALL BE PRODUCED TO A .004-.006 OVERSIZE CONDITION ON THE PITCH DIAMETER BASED ON A 2B CONDITION. THIS DOES NOT APPLY TO THREADED INSERT HOLES.
6. COUNTERSINK 82° ALL TAPPED HOLES TO MAJOR DIAMETER +.015/-.000.
7. COUNTERSINK 82° ALL DRILLED HOLES .015-.030 DEEP BOTH SIDES.
8. RECORD WEIGHT TO NEAREST 0.1 LB ON INSPECTION REPORT AFTER FINAL MACHINING. ESTIMATED WEIGHT IS 29.9 LBS.
9. MARK PART NUMBER WITH 'P' EXTENSION IN APPROXIMATE LOCATION SHOWN. USE ANY METHOD THAT WILL NOT RUB OFF OR SMUDGE UNDER NORMAL HANDLING. THIS MARKING DOES NOT NEGATE NOTE 4 AND WILL BE REMOVED DURING SUBSEQUENT OPERATIONS DEPICTED IN DRAWING 20007838.

THIS DOCUMENT MAY CONTAIN ITAR CONTROLLED INFORMATION AND/OR COMMERCE CONTROLLED INFORMATION EXPORT RESTRICTIONS MAY APPLY

20007828-1P

QTY REQD	ITEM NO	REF DES	CAGE NO	PART OR IDENTIFYING NO	NOMENCLATURE OR DESCRIPTION	SPECIFICATION	MATERIAL OR NOTE	ZONE

PARTS LIST

CONTRACT NO

FILE ATTACHMENTS: 20007828.x_t

NEXT ASSEMBLY	PROJECT CODE
20007838	1388

APPLICATION

UNLESS OTHERWISE SPECIFIED
DIMENSIONS ARE IN INCHES
TOLERANCES
DECIMALS .XX ±.03 .XXX ±.010
ANGLES ±1/2°
MACHINE FINISH 125
DO NOT SCALE DRAWING
INTERPRET DWG PER ASME Y14.5M - 1994
MATERIAL
AL 6061-T651
PER AMS-QQ-A-250/11

RELEASED
11/17/2005
THIS DRAWING IS RELEASED AND NOT UNDER CONTROL OF CCB BASED

DWN	JACQUES LARAMEE	07/12/04	
PROJ ENGR		STRS	
CHK		MATL	
CONFIG		PROJ	
ME		QA	

ALLIANCE SPACESYSTEMS, INC.
1250 Lincoln Ave., Suite 100
Pasadena, CA 91103

SIDE PLATE - STAGE 1 FLEXURE ROD INTERFACE LIGO-D047828-A

SIZE	CAGE CODE		REV
E	1KNU9	20007828	A

SCALE 1:1 | UNCLASSIFIED | SHEET 1 OF 2

REV 7/04

THIS DRAWING IS CREATED AND NOT UNDER CONFIGURATION CONTROL UNLESS A CRD RELEASED
RELEASED
1/11/2005

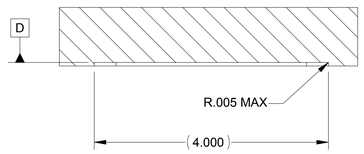

SECTION C-C

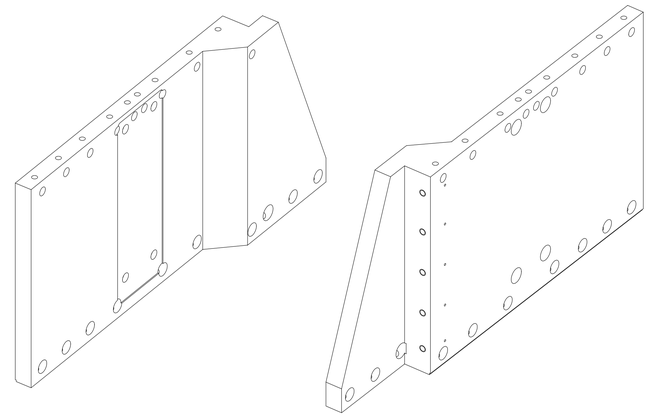

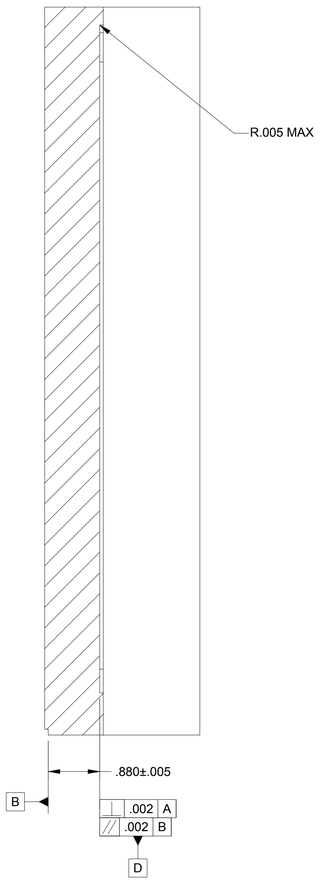

SECTION B-B

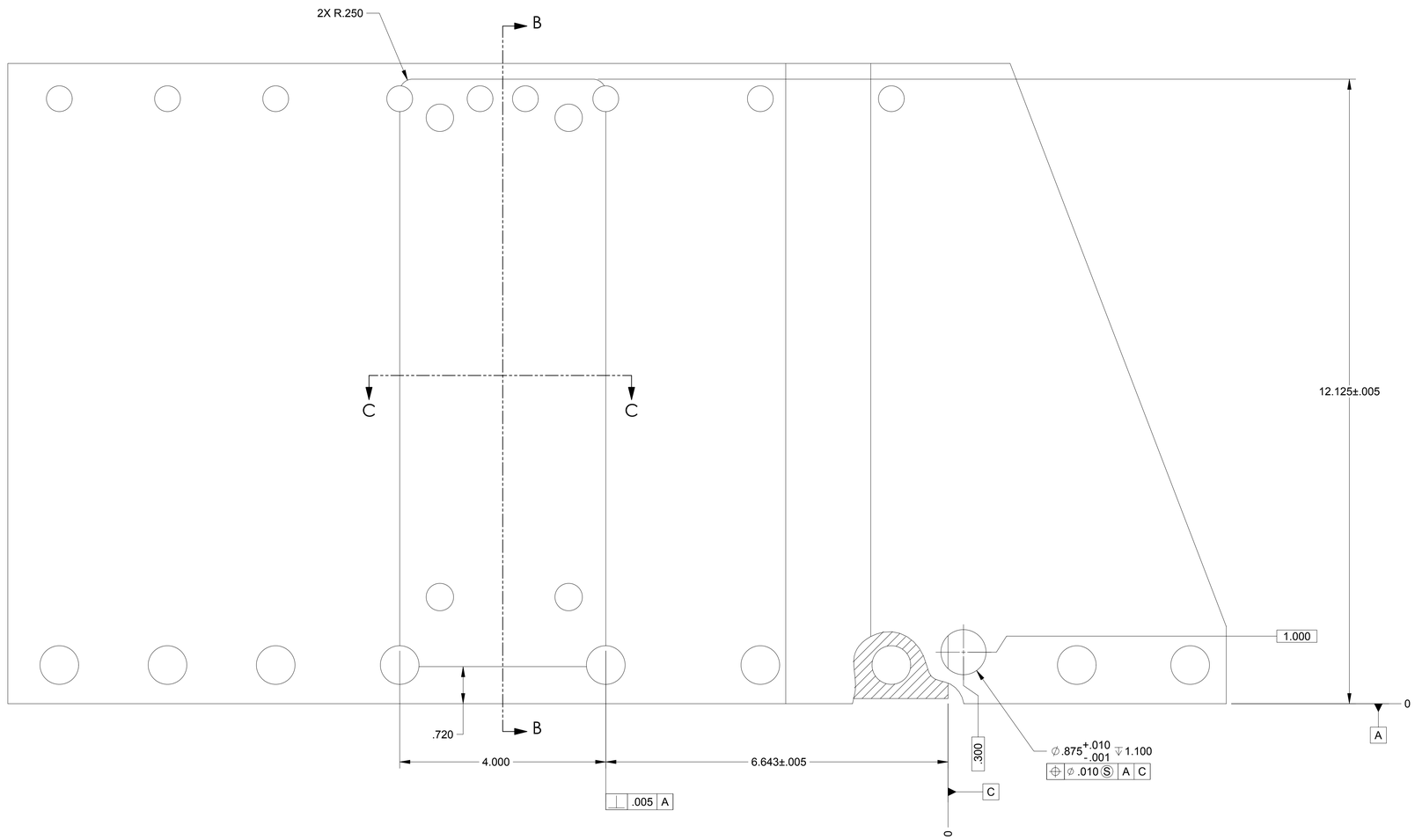

VIEW A-A

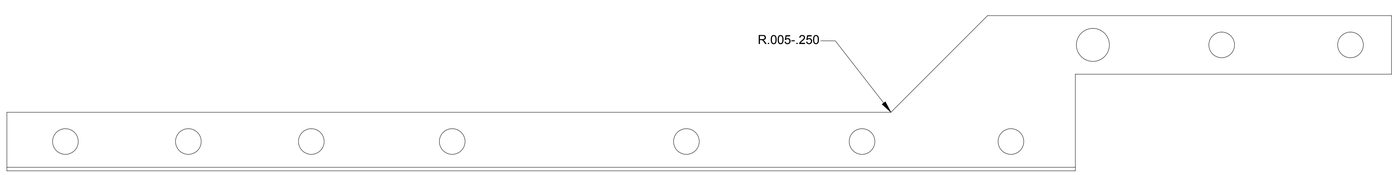

THIS DOCUMENT MAY CONTAIN ITAR CONTROLLED INFORMATION
AND/OR COMMERCE CONTROLLED INFORMATION
EXPORT RESTRICTIONS MAY APPLY

ALLIANCE SPACESYSTEMS, INC.
1250 Lincoln Ave., Suite 100
Pasadena, CA 91103

SIZE	CAGE CODE		REV
E	1KNU9	20007828	A
SCALE 1:1	UNCLASSIFIED	SHEET 2 OF 2	

REV 3/03