NOTES: (UNLESS OTHERWISE SPECIFIED)

REV.	DATE	DCN #	DRAWING TREE #
A	2-4-03	LIGO-E030061-00-R	

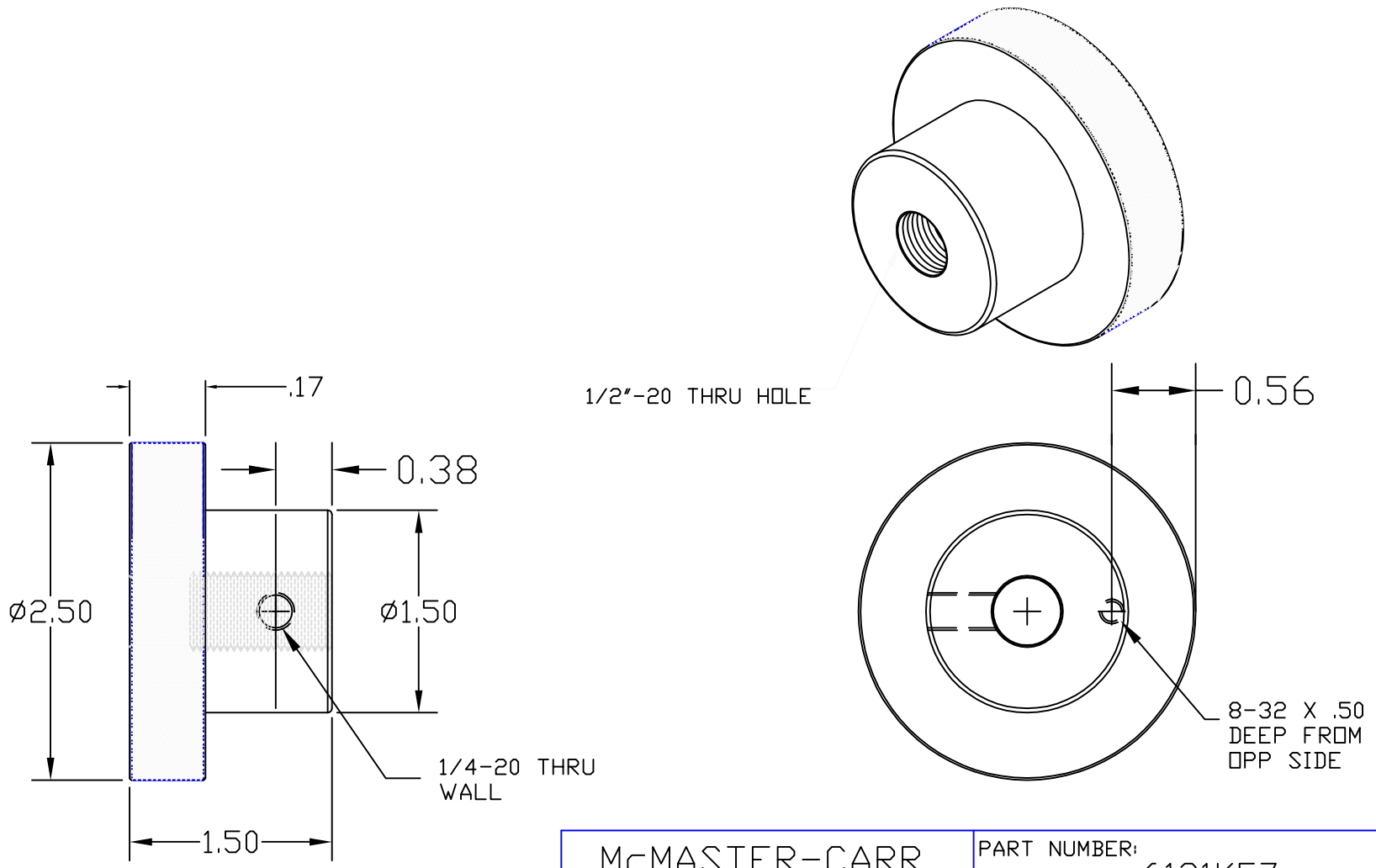

NOTES:
1. USE OVERALL LENGTH DIMENSION TO ESTABLISH SCALE

McMASTER-CARR SUPPLY COMPANY	PART NUMBER: 6121K57
DATE: NOV 2001 / PAGE 1 OF 1	DESCRIPTION: STEEL KNURLED-RIM KNOB 2.5" DIA., WITH 1/2"-20 THREADED THROUGH HOLE
SCALE: NOTE 1	
UNLESS OTHERWISE SPECIFIED: DIMENSIONS ARE IN INCHES	http://www.mcmaster.com (c) 2000 McMaster-Carr Supply Company

ADD 1/4 AND #8 TAPPED HOLES

ITEM NO.	REQ.	SPARE	TOT.	PART NUMBER	DESCRIPTION	SUPPLIER
QUANTITY						

PARTS LIST

	DATE	NAME
DRAWN	2/4/03	KENM
CHECKED		

UNLESS OTHERWISE SPECIFIED DIMENSIONS ARE IN INCHES
TOLERANCES: .XX ± .005 .XXX ± .01 ANGULAR ± 3 DEG
MATERIAL N/A
FINISH NONE
COMMENTS:

LIGO CALIFORNIA INSTITUTE OF TECHNOLOGY MASSACHUSETTS INSTITUTE OF TECHNOLOGY

SYSTEM LASTI
SUB-SYSTEM LASTI HYDRAULIC
NEXT ASSY N/A
PART NAME ROD, LEVEL SENSOR
SIZE C DWG. NO. D030070-A REV
SCALE: SHEET 1 OF 1
FILE NAME/LOCATION: D030070-A KNOB MODIFICATION.dwg