NOTES: (UNLESS OTHERWISE SPECIFIED)

MATERIAL: THREADED FITTING SUPPLIED

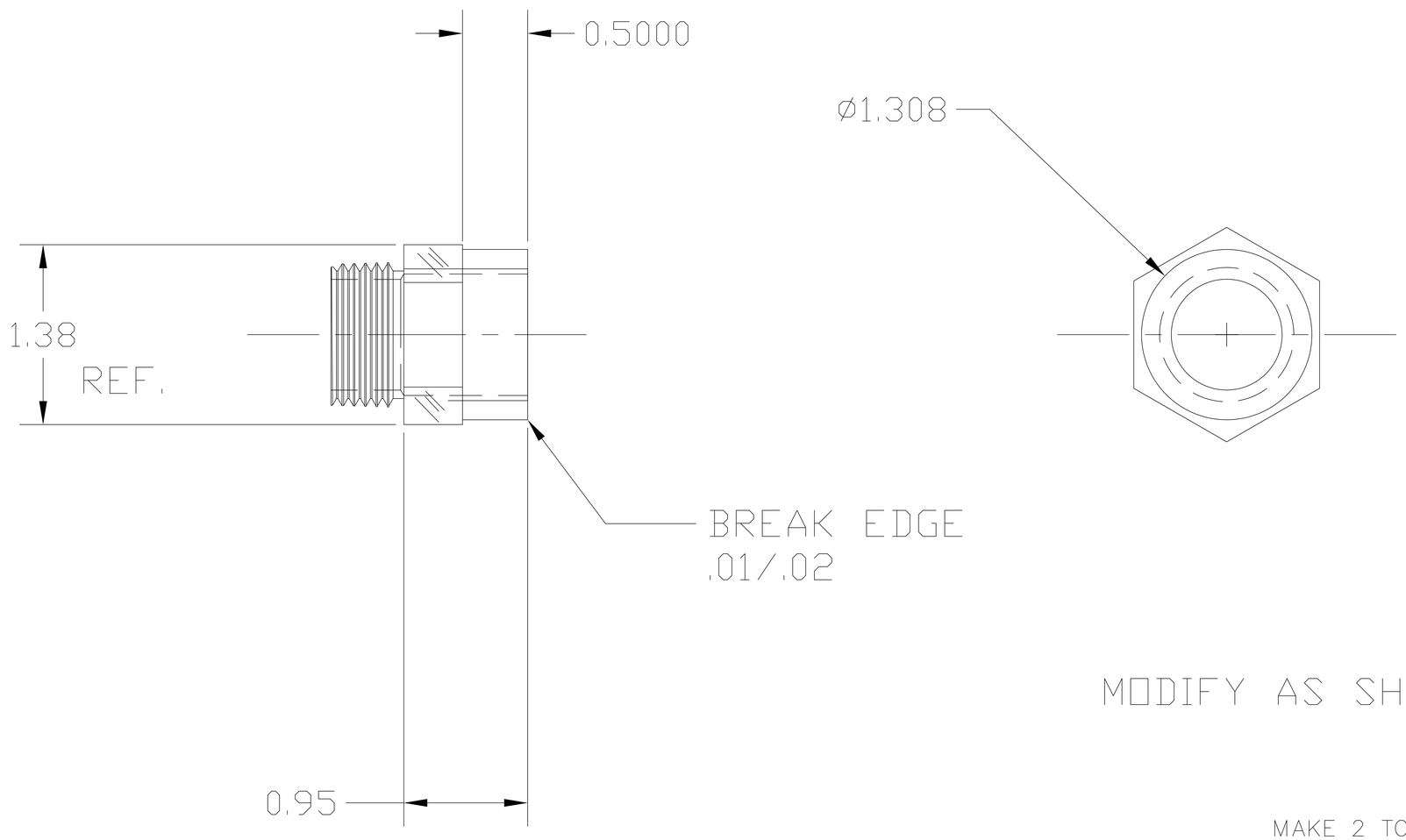

MODIFY AS SHOWN

MAKE 2 TOTAL

REF.	QTY.	PART or DRWG No.	NOMENCLATURE or DESCRIPTION	MATERIAL

PARTS and MATERIAL LIST

DWG. NO.	DESCRIPTION

REFERENCE DRAWINGS

UNLESS OTHERWISE SPECIFIED
DIMENSIONS ARE IN INCHES

TOLERANCES:
FRACTIONAL ±1/16
ANGULAR ±.25°
~~ANGULARMACH ± BEND ±~~
TWO PLACE DECIMAL ± .01
THREE PLACE DECIMAL ± .005
FINISHED SURFACE RMS 63
BREAK CORNERS IN: .015 OUT: .015
REMOVE ALL BURRS

MATERIAL:	HEAT TREAT:	FINISH:
STAINLESS FITTING	/	

USED ON: XXX | NEXT ASS'Y: XXX

REV	DESCRIPTION	DCN NUMBER	-	APPR'D	CHECK	DRWN	DATE
A	NEW-RELEASE	LIGO-E020728-00-R	-			kenm	7-12-02

ISSUE DESCRIPTION

LIGO CALIFORNIA INSTITUTE OF TECHNOLOGY
MASSACHUSETTS INSTITUTE OF TECHNOLOGY

MANIFOLD
ATTACHMENT FITTING
[ACCUMULATOR]

CAD FILE	SIZE	DWG. NO.
D020385-A	B	D020385-A
SCALE 1 : 1		SHEET 1 OF 1