REV.	DATE	DCN #	DRAWING TREE #

Manifold
Large Pin Valve
D020367-1
Mat'l: 17-4PH
(1) required

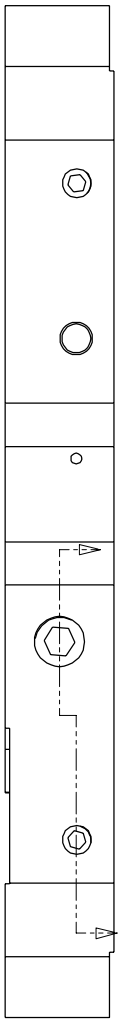

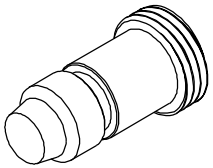

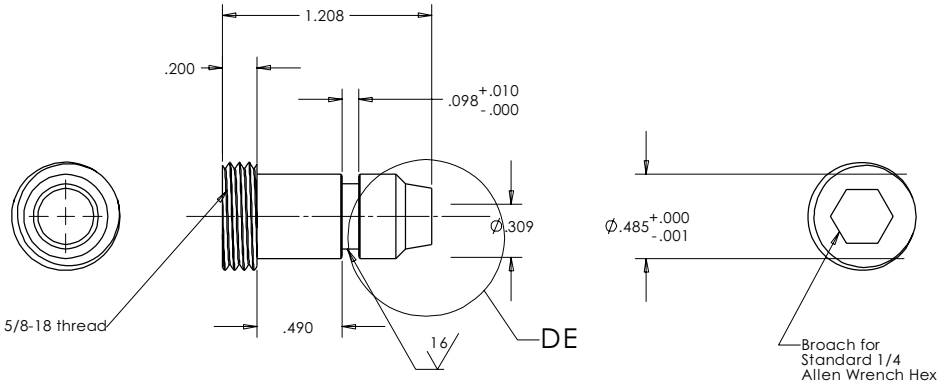

DETAIL DE
SCALE 4 : 1

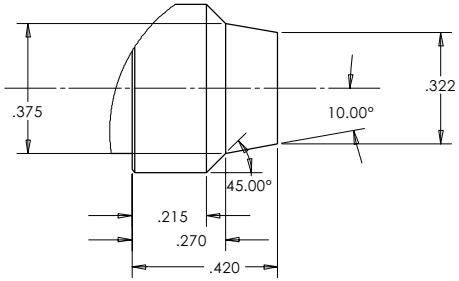

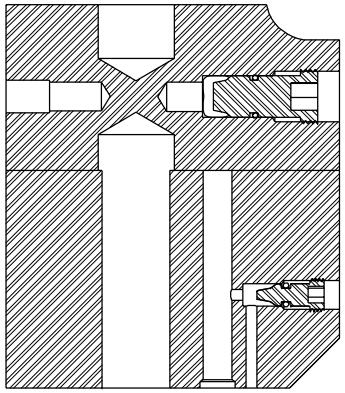

SECTION BW-BW

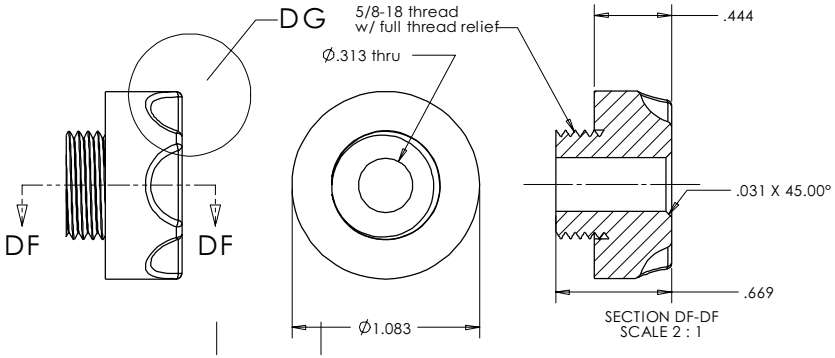

SECTION DF-DF
SCALE 2 : 1

DETAIL DG
SCALE 4 : 1

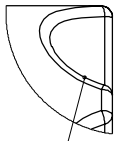

Scallop for thumb
screws approx. as
shown with best
shop practice

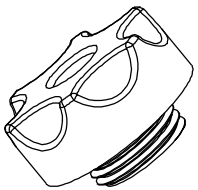

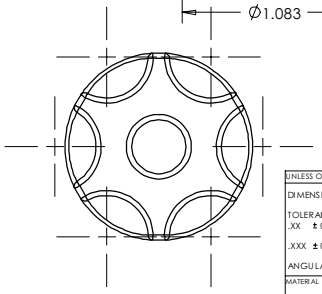

Manifold Large Plug
D020367-2A
Mat'l: 6061-T6
(1) required

HEPI Manifold Sheet 3 with large pin valve

		DATE	NAME
UNLESS OTHERWISE SPECIFIED:			
DIMENSIONS ARE IN INCHES	DRAWN	4/02	Hardham
TOLERANCES: .XX ± 0.020"	REDRAWN	6/22/02	Hammond
.XXX ± 0.005"	CHECKED	6/24/02	Kern
ANGULAR ± 30'			
MATERIAL 304 L	COMMENTS:		
FINISH			

LIGO

CALIFORNIA INSTITUTE OF TECHNOLOGY
MASSACHUSETTS INSTITUTE OF TECHNOLOGY

SYSTEM: LASTI
SUB-SYSTEM: HEPI
NEXT ASSY:
PART NAME:

SIZE: C
DWG. NO.: D020367-03-E
REV:
SCALE:
SHEET 30 OF 37

FILE NAME/LOCATION: