REV.	DATE	DCN #	DRAWING TREE #
v1	28 Mar. 2011	E1100015	E1100016

NOTES CONTINUED:

4. ALL MACHINING FLUIDS MUST BE FULLY SYNTHETIC, FULLY WATER SOLUBLE AND FREE OF SULFUR, SILICONE AND CHLORINE.
5. SCRIBE, ENGRAVE, OR MECHANICALLY STAMP (NO INKS OR DYES) DRAWING PART NUMBER, REVISION (AND VARIANT OR "TYPE" IF APPLICABLE ON NOTED SURFACE OF PART FOLLOWED ON THE NEXT LINE WITH A THREE DIGIT SERIAL NUMBER. SERIAL NUMBERS START AT 001 FOR THE FIRST ARTICLE AND PROCEED CONSECUTIVELY. USE MINIMUM 0.12 HIGH CHARACTERS, UNLESS THE SIZE OF THE PART DICTATES SMALLER CHARACTERS. A VIBRATORY TOOL MAY BE USED. EXAMPLE DXXXXXXX-VY, TYPE-XX, S/N XXX.
6. APPROXIMATE WEIGHT = 19.00084920 LB.
7. ALL PARTS SHALL BE MANUFACTURED IN ACCORDANCE WITH LIGO SPECIFICATION E0900364.
8. PAINT: ALL VISIBLE SURFACES
   MEDIUM BLUE SHERWIN WILLIAMS (POLANE (R) T-PLUS POLYURETHANE ENAMEL) #SW-F63TX-L-2822-5864
   PRIME WITH SHERWIN WILLIAMS INDUSTRIAL WASH PRIMER P60G2
9. "OXI SOLV RUST INHIBITOR" TO BE APPLIED PER MFG. INSTRUCTIONS TO ALL UNPAINTED SURFACES.
   BOTH TAPPED AND THRU HOLES WILL BE PLUGGED DURING APPLICATION.
10. FULL WELDED CONSTRUCTION.
11. STRESS RELIEVE BEFORE FINAL MACHINING.
12. AFTER FINAL MACHINING TO FIT, MARK STIFFENERS AND D020004 WITH CORRESPONDING SERIAL NUMBERS.

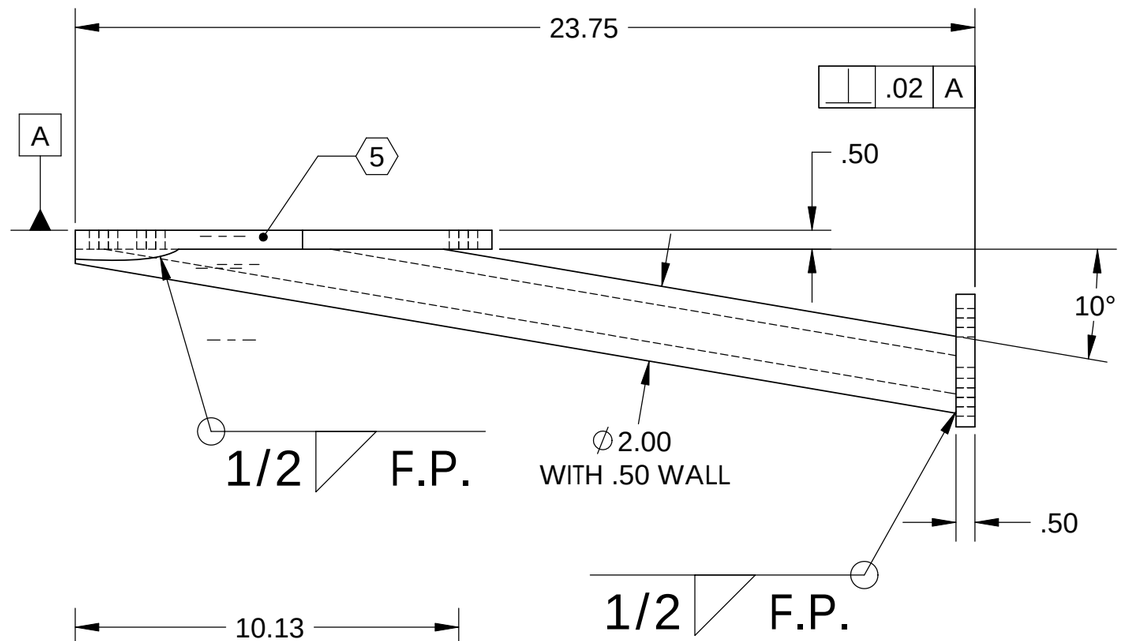

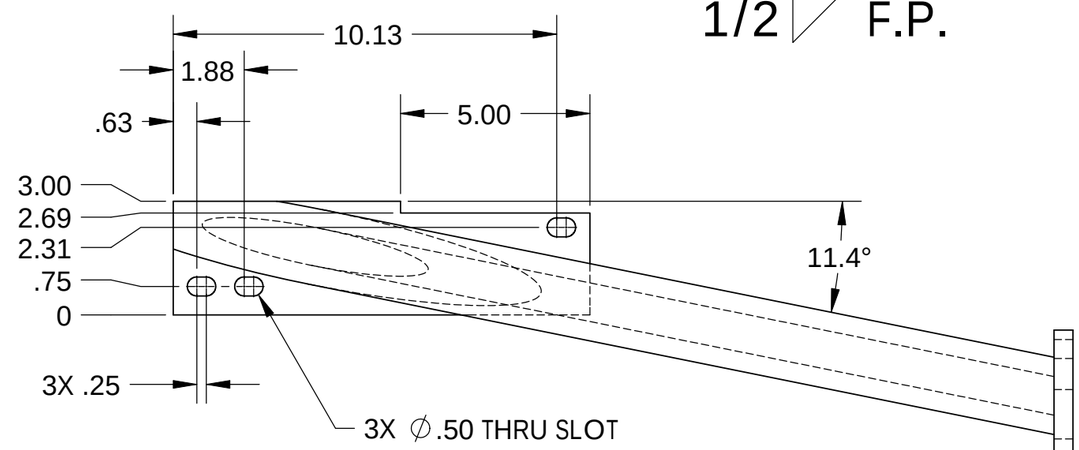

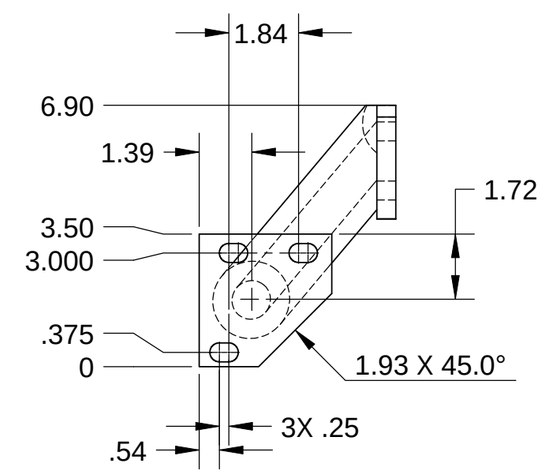

D020332 HOUSING STIFFENER, LEFT, PANEL, PART PDM REV: X-007, DRAWING PDM REV: X-003

NOTES AND TOLERANCES: (UNLESS OTHERWISE SPECIFIED)			
DIMENSIONS ARE IN INCHES TOLERANCES: .XX ± .015 .XXX ± .005 ANGULAR ± .5°	1. INTERPRET DRAWING PER ASME Y14.5-1994. 2. REMOVE ALL SHARP EDGES, .03 x 45°. 3. DO NOT SCALE FROM DRAWING.	MATERIAL ASTM A519 Steel	FINISH 63 µinch

LIGO CALIFORNIA INSTITUTE OF TECHNOLOGY
MASSACHUSETTS INSTITUTE OF TECHNOLOGY

PART NAME: PRE-ISOLATOR ASSEMBLY, HOUSING STIFFENER, LEFT PANEL

SYSTEM	SUB-SYSTEM						
ADVANCED LIGO	SEI	DESIGNER	K.MASON	20 JUNE 2002	SIZE B	DWG. NO. D020332	REV. v1
		DRAFTER	M.HILLARD	28 Mar. 2011			
NEXT ASSY		CHECKER	K.MASON	20 June 2002			
D1100146, D1100242		APPROVAL	K.MASON	28 Mar. 2011	SCALE: 1:4	PROJECTION:	SHEET 1 OF 1