REVISIONS				
ZONE	REV.	DESCRIPTION	DATE	APPROVED
	C	E080509-00, Added -03	10/08	

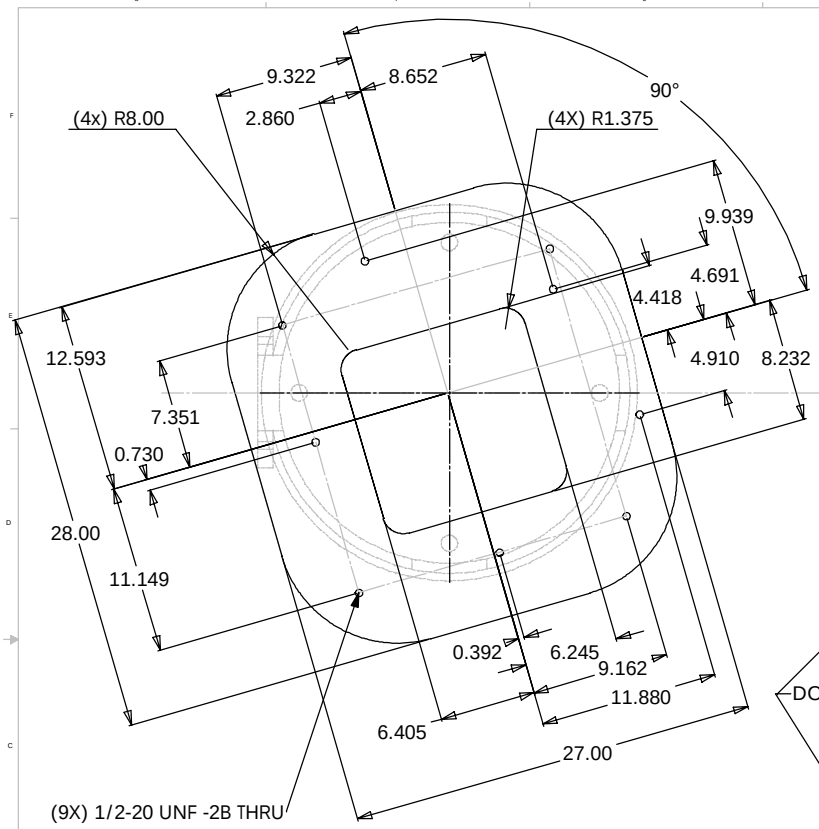

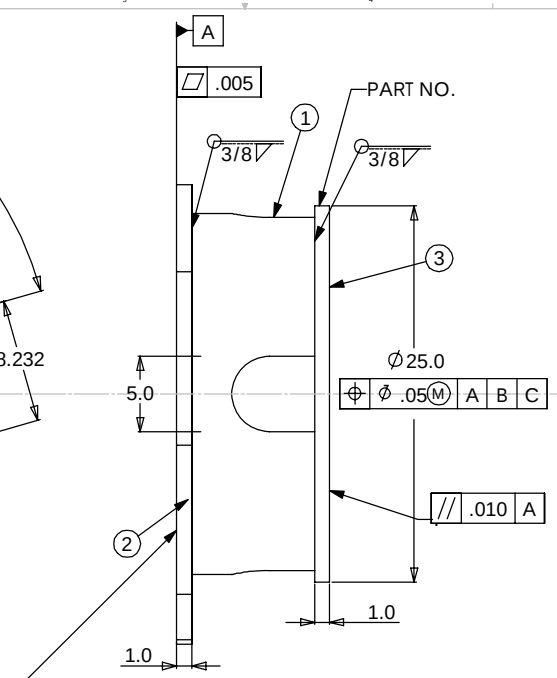

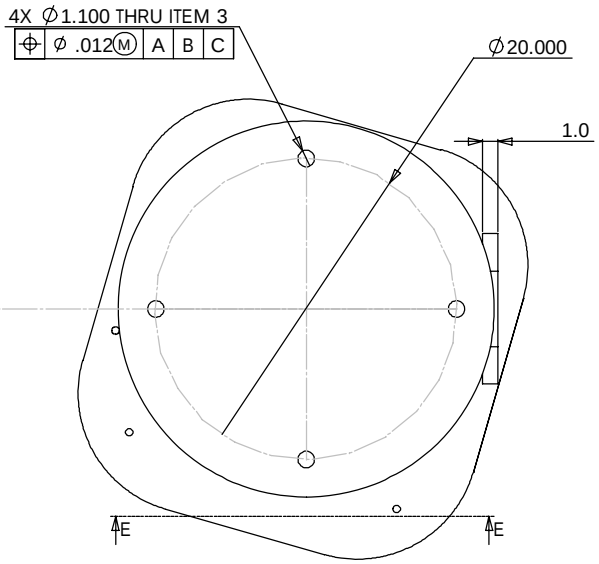

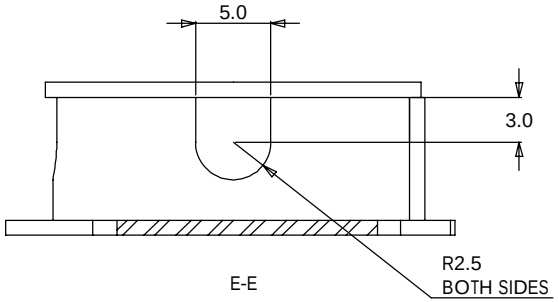

E-E

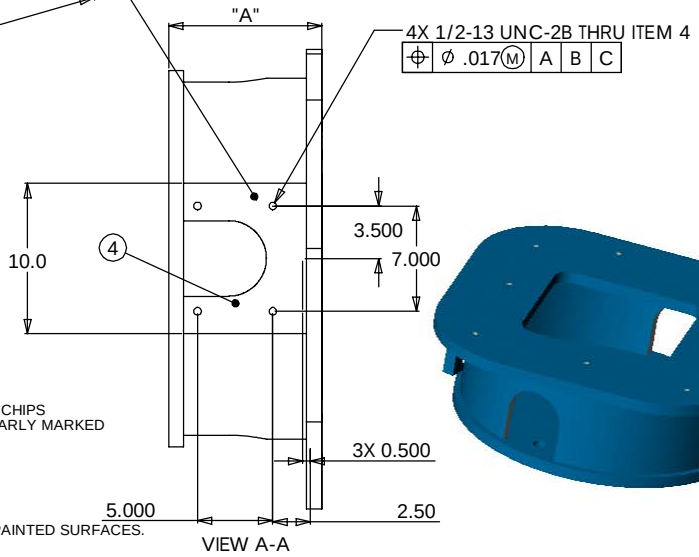

VIEW A-A

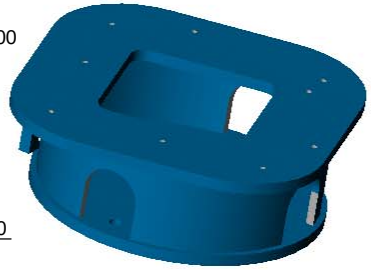

PART NO.	DESCRIPTION	DIM. "A"	WEIGHT
D020126-1	HAM PIER FOR LIVINGSTON (LLO) SITE	10.17	413.4 lbs.
D020126-3	HAM PIER FOR HANFORD (LHO) SITE	11.17	400.2 lbs.

NOTES: UNLESS OTHERWISE SPECIFIED
1. ALL DIMENSIONS IN INCHES
2. DIMENSIONS AND TOLERANCING PER ASME Y14.5M-1994
3. SURFACE TEXTURE PER ANSI/ASME B 46.1-1985
4. REMOVE ALL BURRS AND BREAK SHARP EDGES TO A MAXIMUM OF .015
5. ALL INSIDE CORNERS TO BE .015 RADIUS MAX
6. COUNTERSINK 82 DEGREES ALL TAPPED HOLES TO MAJOR DIAMETER
7. COUNTERSINK 82 DEGREES APPROXIMATELY .03/.06 DEEP ALL DRILLED HOLES
8. PARTS TO BE THOROUGHLY CLEANED TO REMOVE ALL OIL, GREASE, DIRT AND CHIPS
9. PART NUMBER (DRAWING NO., DASH NO., REVISION NO., SERIAL NO.) TO BE CLEARLY MARKED ON THE PART ITSELF.
10. PAINT:
ALL VISIBLE SURFACES
MEDIUM BLUE SHERWIN WILLIAMS (POLANE (R) T-PLUS,
POLYURETHANE ENAMEL,) #SW-F63TX-L-2822-5864.
PRIME WITH SHERMAN-WILLIAMS INDUSTRIAL WASH PRIMER P60G2.
11. "OXI SOLV RUST INHIBITER" TO BE APPLIED PER MFG. INSTRUCTIONS TO ALL UNPAINTED SURFACES. BOTH TAPPED AND THRU BOLT HOLES WILL BE PLUGGED DURING APPLICATION.

ITEM	QTY.	DESCRIPTION	MATERIAL	
2	1	PLATE	A36 STEEL or EQ.	
3	1	PLATE	A36 STEEL or EQ.	
4	1	PLATE	A36 STEEL or EQ.	
1	1	TUBE 24" OD x .68 THK	A36 STEEL or EQ.	

UNLESS OTHERWISE SPECIFIED:
DECIMALS .X ± .06 .XX ± .03 .XXX ± .01
ANGLES ± 1 ± .5

MATERIAL --
FINISH --
DO NOT SCALE DRAWING

LIGO CALIFORNIA INSTITUTE OF TECHNOLOGY MASSACHUSETTS INSTITUTE OF TECNOLOGY

DRAWN	K. MASON	3/11/02
CHECKED	K. MASON	3/11/02

COMMENTS:

TITLE: HAM SUPPORT PIER PRE-ISOLATOR ASSEMBLY

SIZE	DWG. NO.	REV
D	D020126-C-D	C

SCALE: 1:4 CAD FILE: D020126-03.SLDDRW SHEET 1 OF 1