REV	DATE	DRAWN BY	CHECKED	DCC	DCN/DESCRIPTION

GENERAL NOTES, BOTH BRACKETS:
1. MACHINE BOTTOM OF 4.5 X 4.5 PADS TO CLEAN UP AFTER WELDING
2. BREAK ALL SHARP EDGES
3. PAINT BRACKET (EXCEPT FOR PAD BOTTOMS) WITH EPOXY GLOSS, DARK BLUE

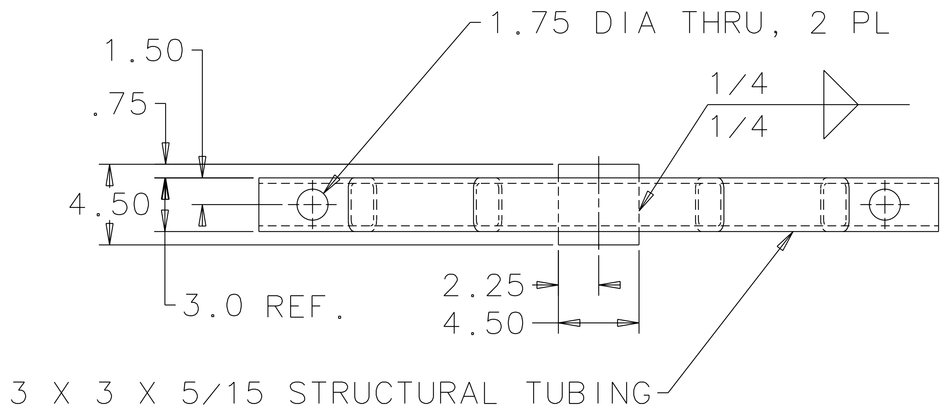

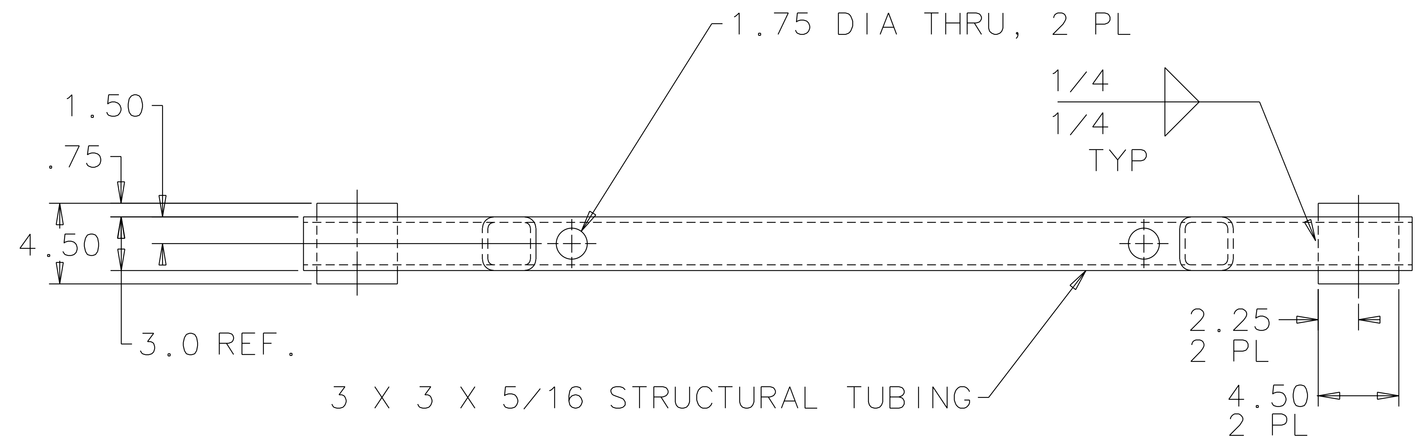

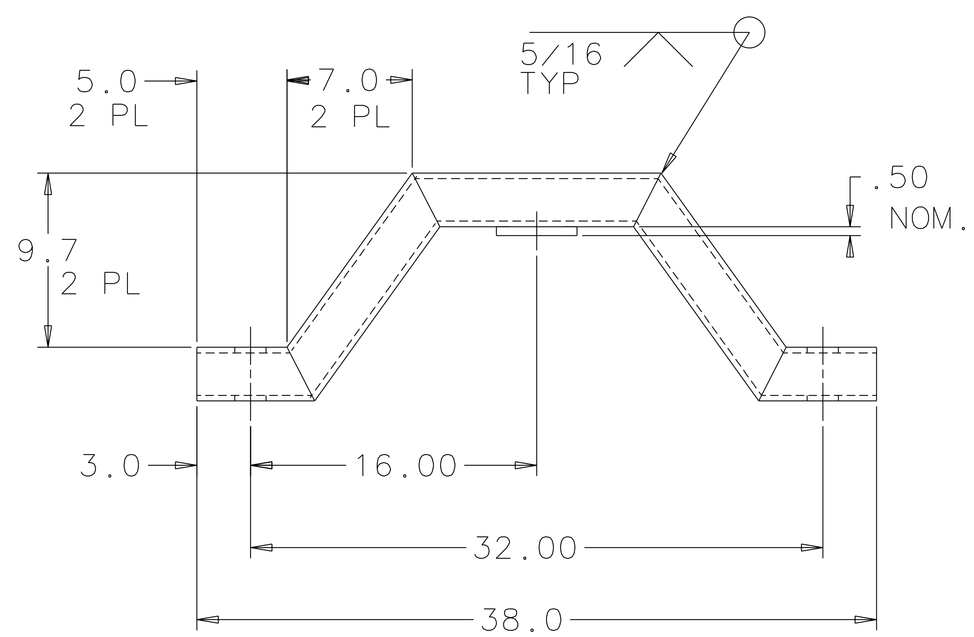

-1 SINGLE ISOLATOR BRACKET

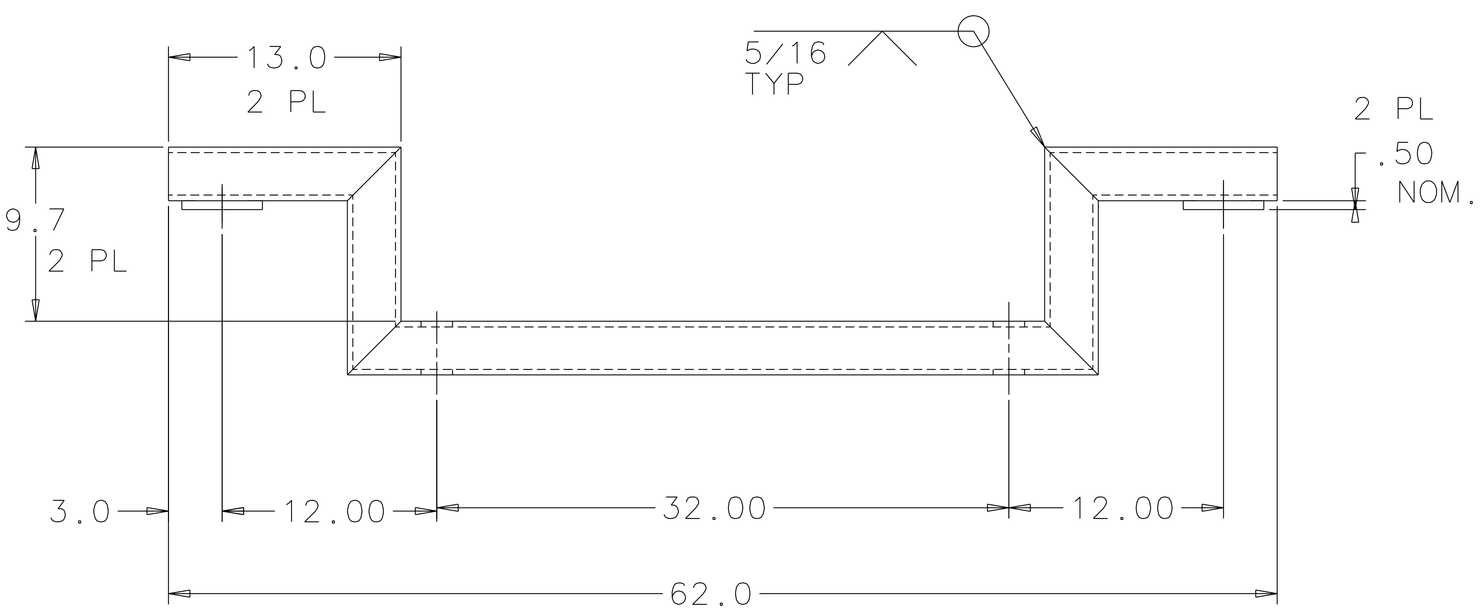

-2 DUAL ISOLATOR BRACKET

INSTALLATION NOTES

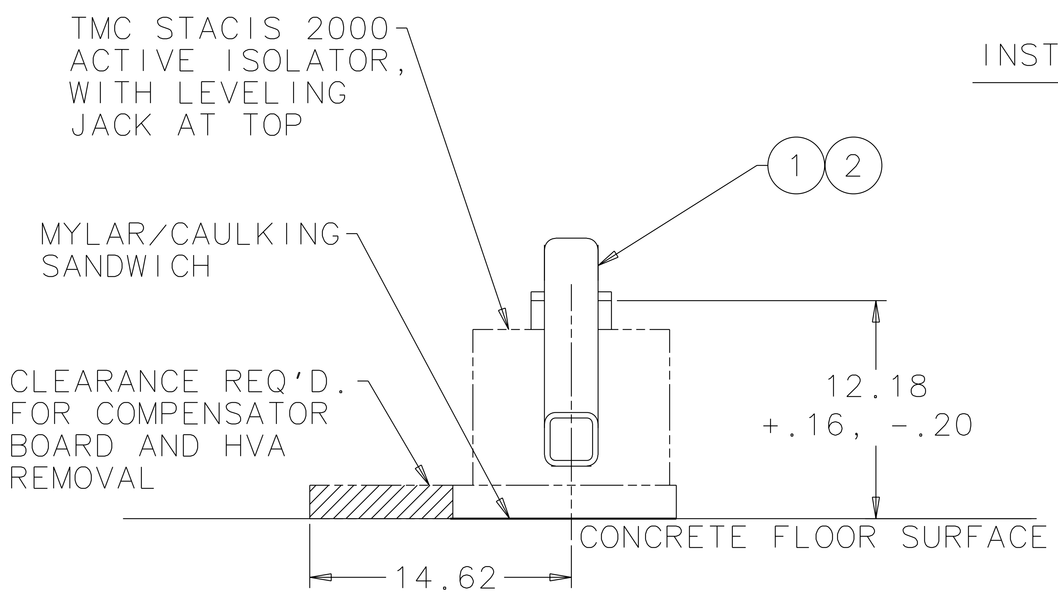

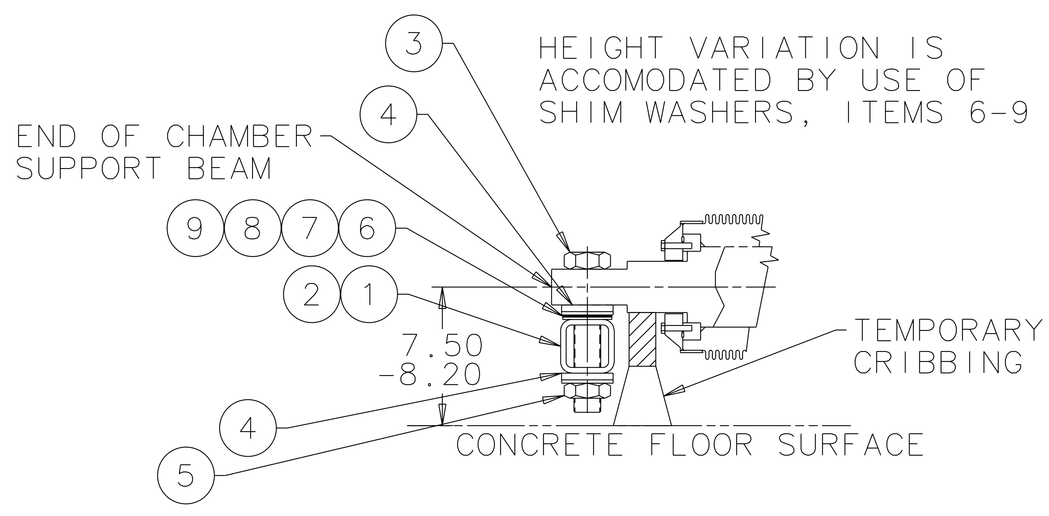

QUANTITIES SHOWN ARE PER CHAMBER, WITH 3 STASIS UNITS
McMASTER-CARR CATALOGUE NUMBERS ARE SHOWN AS *XXXXXXX

QTY REQD	PART OR IDENTIFYING NO	NOMENCLATURE OR DISCRIPTION	MATERIAL SPECIFICATION	ITEM NO
4	*3088A372	1.75" ID X .015" STEEL SHIM WSHR	AISI 1010	9
4	*3088A442	1.75" ID X .031" STEEL SHIM WSHR	AISI 1010	8
4	*3088A477	1.75" ID X .062" STEEL SHIM WSHR	AISI 1010	7
16	*3088A522	1.75" ID X .125" STEEL SHIM WSHR	AISI 1010	6
8	*91131A124	1.5" SPHERICAL WASHER SET	CS HD STEEL	5
4	*91078A043	1.5"-6 HEX THIN NUT, GR 2	ZN/STEEL	4
4	*91283A476	1.5"-6 x 8" HEX BOLT, GR 5	STEEL	3
1	D000187-2	DUAL ISOLATOR BRACKET	A500 GR B	2
1	D000187-1	SINGLE ISOLATOR BRACKET	A500 GR B	1

PARTS LIST

		DATE
DRWN	L. Jones	5/25/00
CHKD		
ENGR		
APPD		

UNLESS OTHERWISE SPECIFIED:
DIMENSION UNITS ARE inches [mm]
TOLERANCES ARE:
X.XXX: ± 0.005
X.XX: ± 0.01
X.X: ± 0.1
DO NOT SCALE DRAWING

CALIFORNIA INSTITUTE OF TECHNOLOGY
MASSACHUSETTS INSTITUTE OF TECHNOLOGY
LIGO PROJECT

I-Deas CAD file: D000187-00.asc
dcc file: D000187-00.pdf

SADDLE MOUNT BRACKETS
FOR 40M ACTIVE ISOLATORS

SCALE: NTS | SIZE E | DRAWING NUMBER D000187-00 | SHEET 1 OF 1