PROPRIETARY AND CONFIDENTIAL
THE INFORMATION CONTAINED IN THIS DRAWING IS THE SOLE PROPERTY OF GNB CORPORATION. ANY REPRODUCTION IN PART OR AS A WHOLE WITHOUT THE WRITTEN PERMISSION OF GNB CORPORATION IS PROHIBITED.

REVISIONS				
ZONE	REV.	DESCRIPTION	DATE	APPROVED
	A	RELEASED TO PRODUCTION	8/23/2010	MKM2

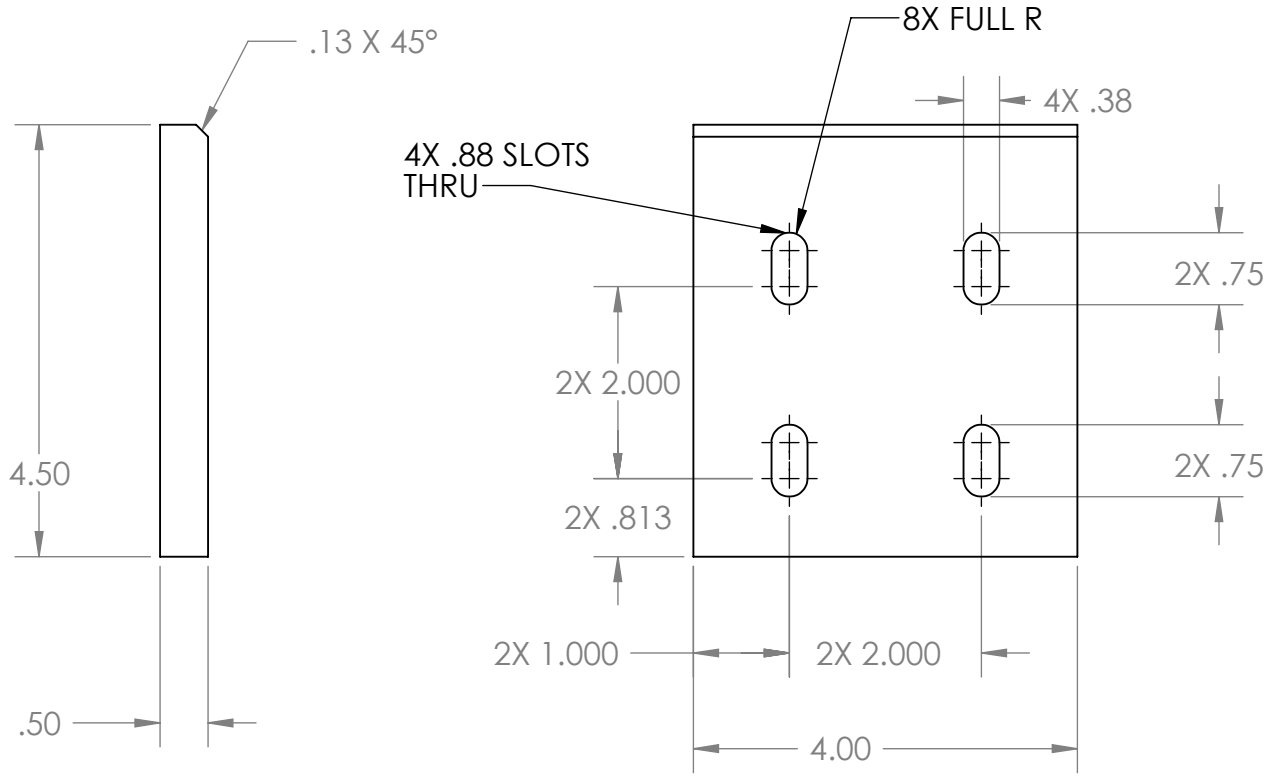

NOTES:
1. THE FOLLOWING ARE NOT ALLOWED: GRINDING, HONING, LAPPING, POLISHING, BUFFING, SANDING, BLASTING.
2. NO HYDROCARBONS ALLOWED IN THE COOLANT. COOLANT LIMITS AS FOLLOWS
   a. WATER LEACHABLE CHLORIDES: 100PPM
   b. TOTAL HALOGENS (INCLUDING CHLORIDES): 1000PPM
   c. TOTAL SULFUR: 1000PPM
3. DO NOT ALLOW PART TO BE CONTAMINATED BY CARBON STEEL OR IRON CONTACT.
4. MACHINING TO BE IN LINE WITH LIGO SPECIFICATION E0900406, LATEST REVISION.
5. A 2"X12" COUPON OF MATERIAL FROM THE SAME LOT OF MATERIAL MUST BE PROVIDED WITH EACH PIECE.

DESCRIPTION: PLATE, .50 THK, 4.00 WD, 4.50 LG

MATERIAL: AISI 304/AISI 304L DUAL CERT PER SA-240

UNLESS OTHERWISE SPECIFIED:
DIMENSIONS ARE IN INCHES
TOLERANCES: FINISH 125
ANGULAR: ± 0°30'
.XX ± .03
.XXX ± .005
UNSPECIFIED FILLETS: R.015
BREAK EDGES .010 x 45°
REMOVE ALL BURRS
// , ▱ , ⊥ WITHIN .03
THIRD ANGLE PROJECTION

WEIGHT: 2.45 #

APPROVALS

	NAME	DATE
DRAFTER	MKM2	7/2/10
CHECKER	RW	7/9/10
ENGINEER	MKM2	7/2/10

DO NOT SCALE DRAWING

GNB CORPORATION
SCIENTIFIC AND INDUSTRIAL EQUIPMENT
3200 DWIGHT RD. SUITE 100
ELK GROVE, CA 95758
916-395-3003 FAX: 916-395-3363
WWW.GNBVALVES.COM

TITLE: PLATE, TOP, BRACKET, MIDSTATION SPOOL

A DWG. NO. 114272-00S REV A

SCALE: 1:2 SHEET 1 OF 1

5 4 3 2 1