REV.	DATE	DCN #	DRAWING TREE #
v1	07 JAN 2011	-	-
-	-	-	-
-	-	-	-

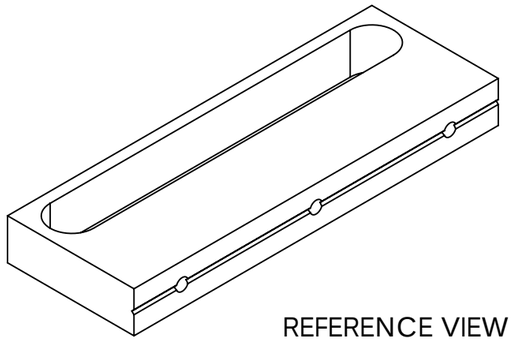

REFERENCE VIEW
SCALE: NONE

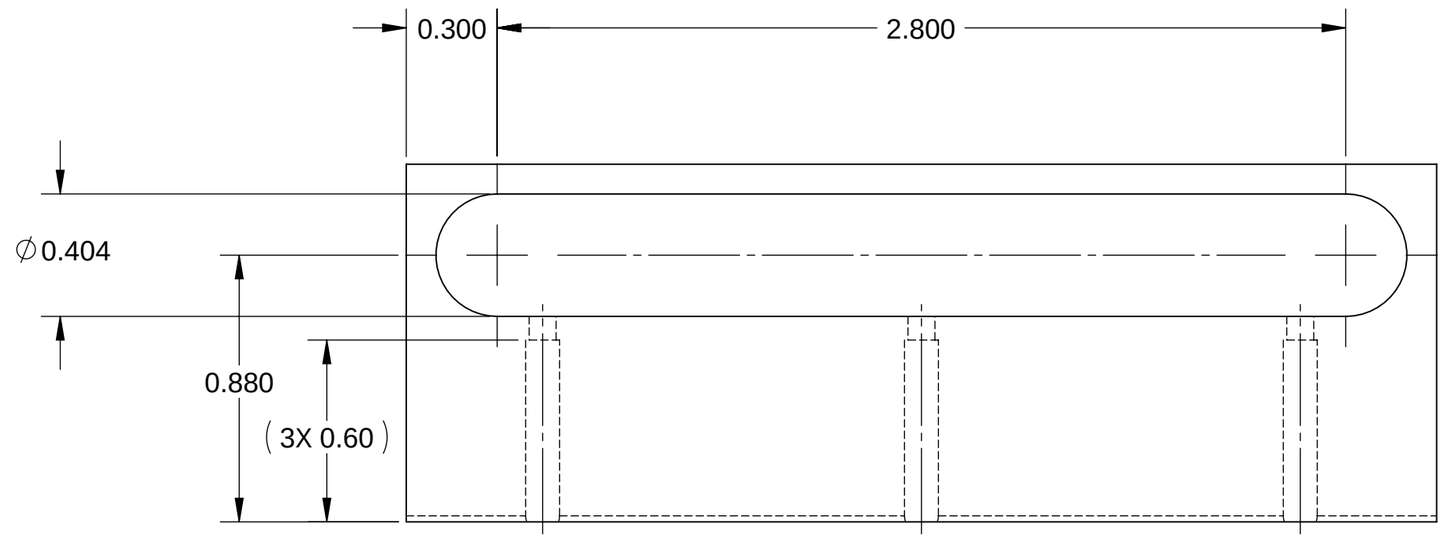

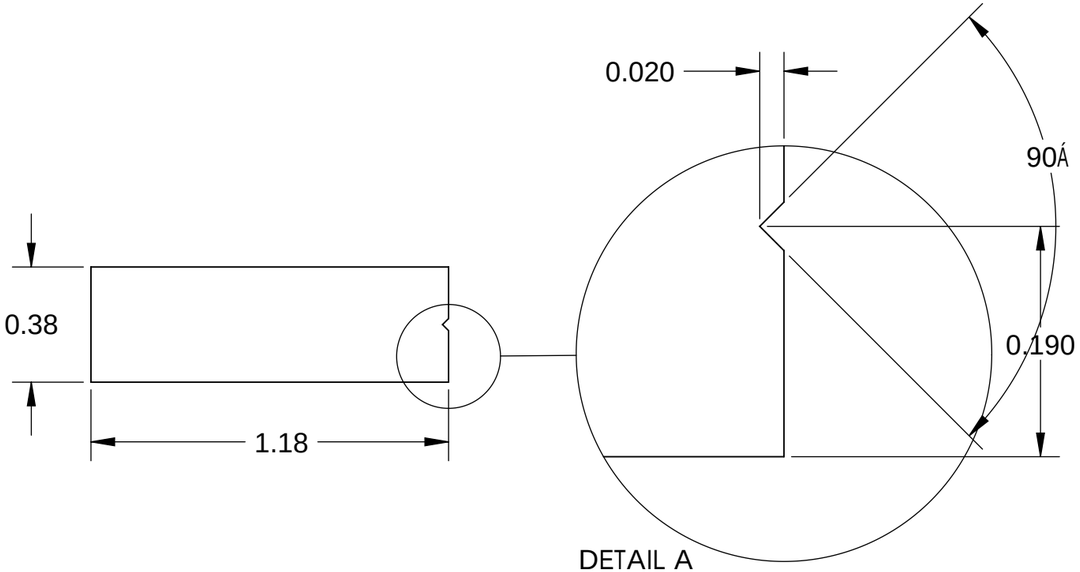

DETAIL A
SCALE 8 : 1

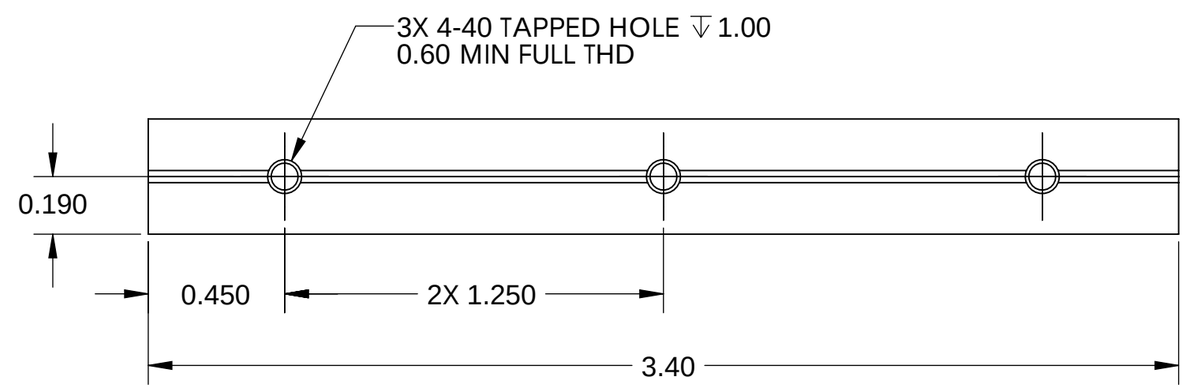

NOTES CONTINUED:

5. SCRIBE, ENGRAVE, OR MECHANICALLY STAMP (NO INKS OR DYES) DRAWING PART NUMBER, REVISION (AND VARIANT OR "TYPE" IF APPLICABLE) ON NOTED SURFACE OF PART FOLLOWED ON THE NEXT LINE WITH A THREE DIGIT SERIAL NUMBER. SERIAL NUMBERS START AT 001 FOR THE FIRST ARTICLE AND PROCEED CONSECUTIVELY. USE MINIMUM 0.12" HIGH CHARACTERS, UNLESS THE SIZE OF THE PART DICTATES SMALLER CHARACTERS. A VIBRATORY TOOL MAY BE USED. EXAMPLE: DXXXXXXX-VY, TYPE-XX, S/N XXX

NOTES AND TOLERANCES: (UNLESS OTHERWISE SPECIFIED)

DIMENSIONS ARE IN INCHES

TOLERANCES:
.XX ± .02
.XXX ± .005

ANGULAR ± 0.5°

1. INTERPRET DRAWING PER ASME Y14.5-1994.
2. REMOVE ALL SHARP EDGES, R.02 MIN.
3. DO NOT SCALE FROM DRAWING.
4. ALL MACHINING FLUIDS MUST BE FULLY SYNTHETIC, FULLY WATER SOLUBLE AND FREE OF SULFUR, SILICONE, AND CHLORINE.

MATERIAL: 6061-T6 Al
FINISH: 125 ⌀inch

LIGO — CALIFORNIA INSTITUTE OF TECHNOLOGY / MASSACHUSETTS INSTITUTE OF TECHNOLOGY

SYSTEM | SUB-SYSTEM | NEXT ASSY: D1001347

PART NAME: aLIGO, CABLES BSC, BASEPLATE

DESIGNER	J. DAVIS	21 MAY 2010
DRAFTER	J. DAVIS	25 MAY 2010
CHECKER		
APPROVAL		

SIZE: B | DWG. NO.: D1001342-2 | REV.: v1

SCALE: 2:1 | PROJECTION: | SHEET 1 OF 1

D1001342-2 - aLIGO, CABLES BSC, BASEPLATE, PART PDM REV: X-000, DRAWING PDM REV: X-000