REV.	DATE	DCN #	DRAWING TREE #
v1	10 May. 2010	E1000155	E1000025

NOTES CONTINUED:

(5) SCRIBE, ENGRAVE, OR MECHANICALLY STAMP (NO INKS OR DYES) DRAWING PART NUMBER, REVISION (AND VARIENT OR "TYPE" IF APPLICABLE ON NOTED SURFACE OF PART FOLLOWED ON THE NEXT LINE WITH A THREE DIGIT SERIAL NUMBER. SERIAL NUMBERS START AT 001 FOR THE FIRST ARTICLE AND PROCEED CONSECUTIVELY. USE MINIMUM 0.12 HIGH CHARACTERS, UNLESS THE SIZE OF THE PART DICTATES SMALLER CHARACTERS. A VIBRATORY TOOL MAY BE USED. EXAMPLE DXXXXXXX-VY, TYPE-XX, S/N XXX.

6. APPROXIMATE WEIGHT = 0.018 LB.
7. MACHINE ALL SURFACES TO REMOVE OXIDES AND MILL FINISH, USE OF ABRASIVE REMOVAL TECHNIQUES IS NOT ALLOWED.
8. ALL PARTS SHALL BE MANUFACTURED IN ACCORDANCE WITH LIGO SPECIFICATION E0900364.

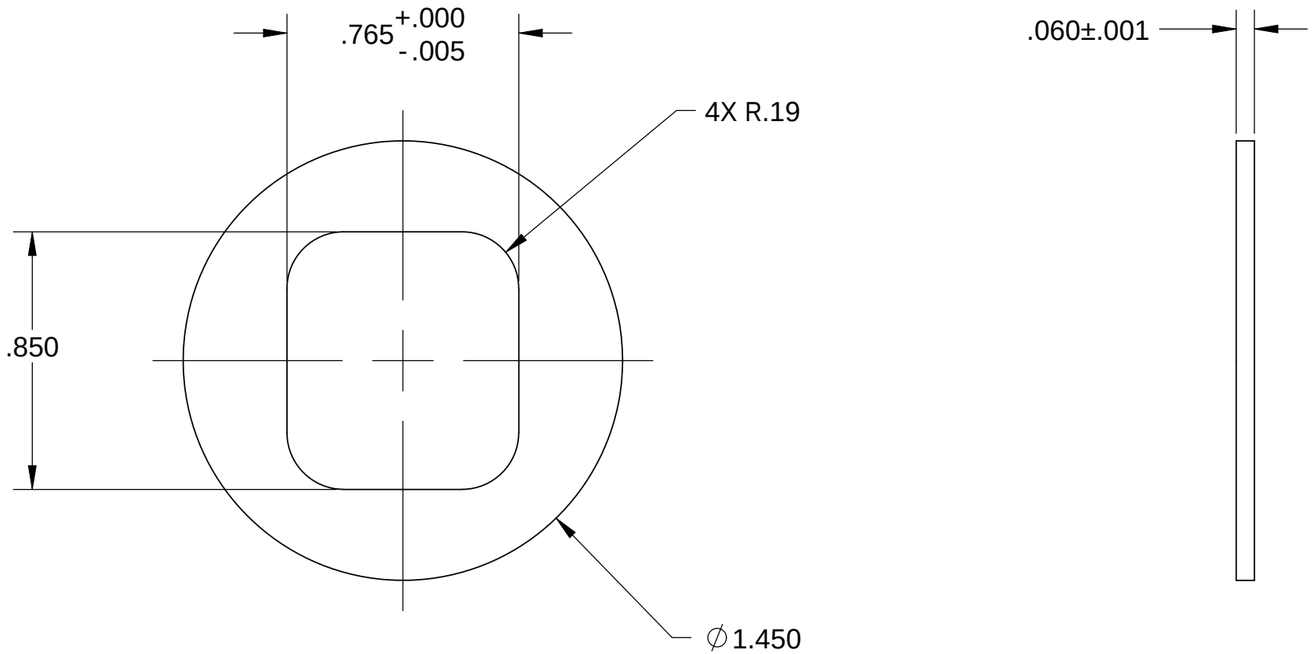

NOTES AND TOLERANCES: (UNLESS OTHERWISE SPECIFIED)

DIMENSIONS ARE IN INCHES

TOLERANCES:
.XX ± .015
.XXX ± .005

ANGULAR ± .5°

1. INTERPRET DRAWING PER ASME Y14.5-1994.
2. BREAK ALL EDGES AND CORNERS .03 X 45°.
3. DO NOT SCALE FROM DRAWING.
4. ALL MACHINING FLUIDS MUST BE FULLY SYNTHETIC, FULLY WATER SOLUBLE AND FREE OF SULFUR, SILICONE, AND CHLORINE.

MATERIAL: 304, 316 OR 302 SSTL

FINISH: 63 µinch

LIGO — CALIFORNIA INSTITUTE OF TECHNOLOGY, MASSACHUSETTS INSTITUTE OF TECHNOLOGY

SYSTEM: ADVANCED LIGO

SUB-SYSTEM: SEI

NEXT ASSY: D1001112

PART NAME: STAGE 1-2 TOOLING STANDOFF WASHER, aLIGO BSC ISI

DESIGNER	ASI	12 Dec. 2005
DRAFTER	M.HILLARD	10 May. 2010
CHECKER	F.MATICHARD	10 May. 2010
APPROVAL	K.MASON	10 May. 2010

SIZE: B

DWG. NO.: D1001113

REV.: v1

SCALE: 2:1

PROJECTION:

SHEET 1 OF 1

D1001113 STAGE 1-2 TOOLING STANDOFF WASHER, aLIGO BSC ISI, PART PDM REV: X-003, DRAWING PDM REV: X-002