The purpose of this document is to define the interfaces between "subsystems".

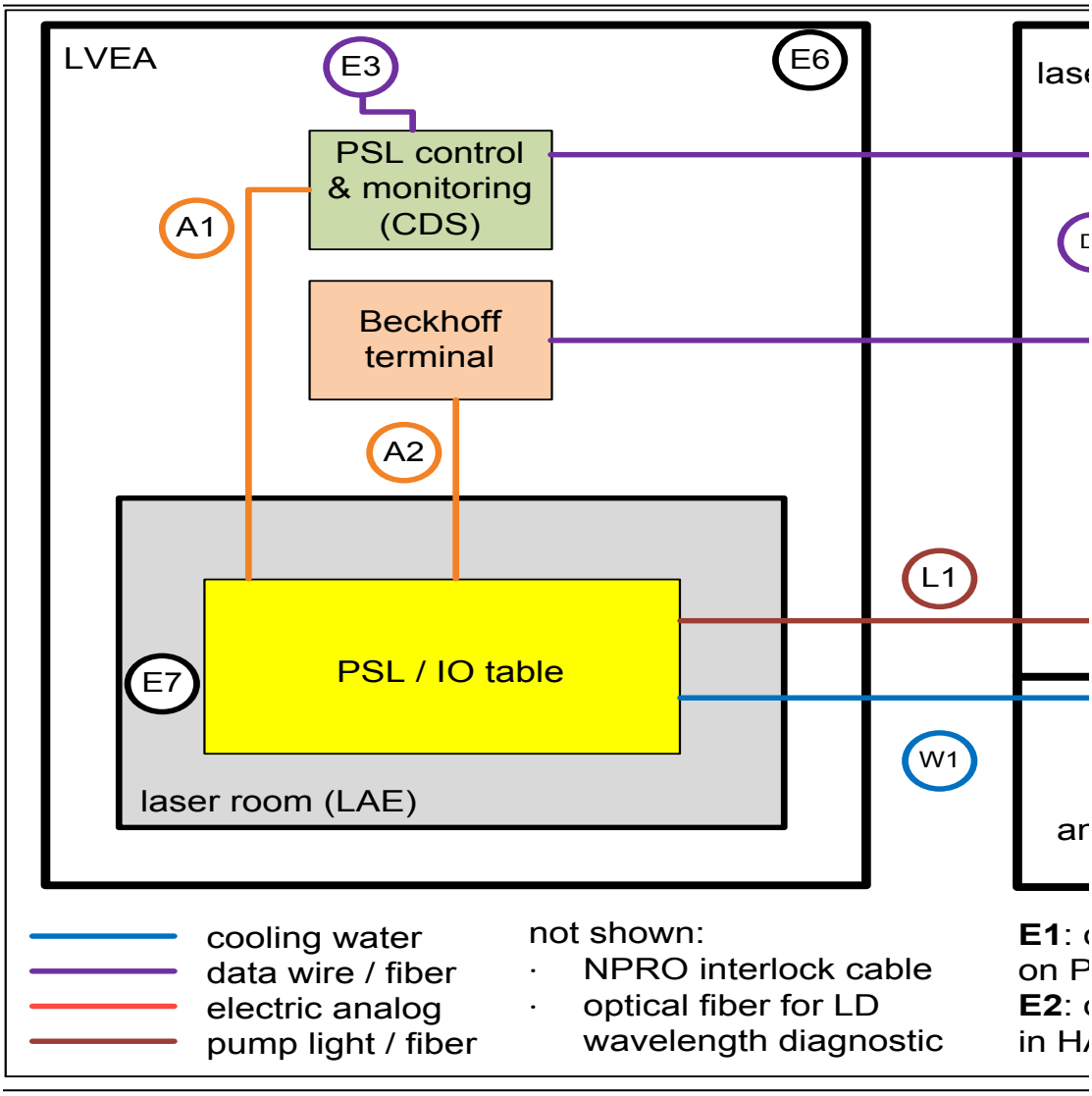

Version control:

6/6/06	Benno	first draft with basic structure, send to Maik and Peter for editing their sections
2/6/08	Christian/Maik	new stucture with A, D, X etc interfaces
1/14/09	Benno	new interface definition picture, major revision of document for PSL FDR

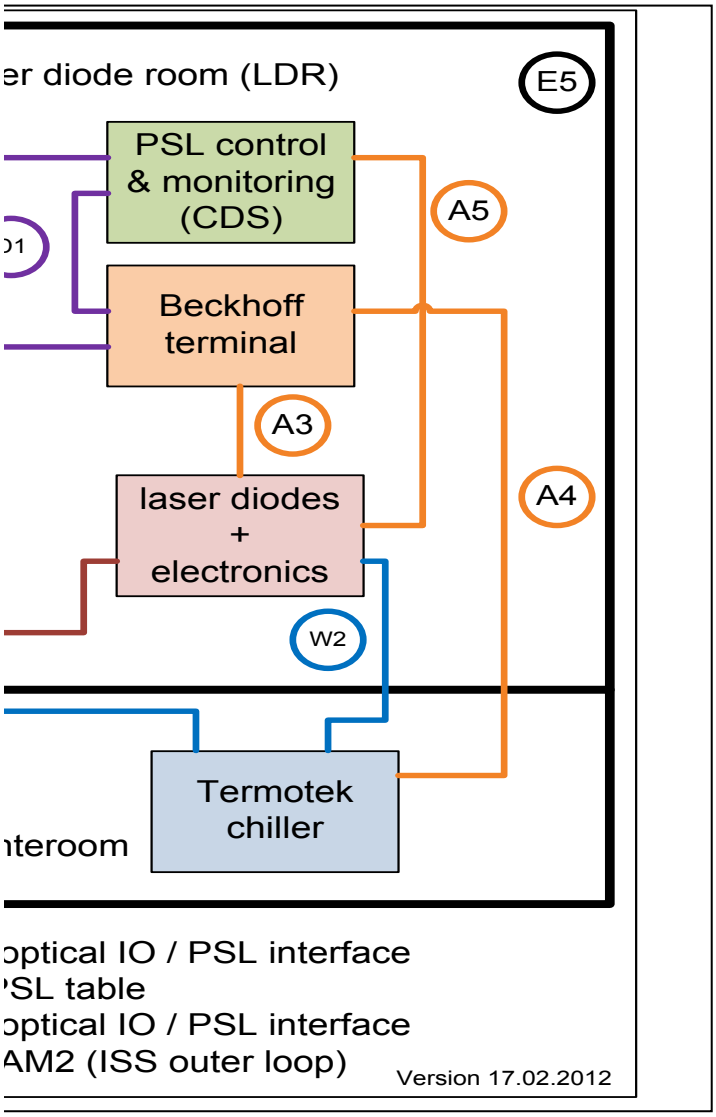

A analog
E external (from PSL to …)
D digital
W water
L light