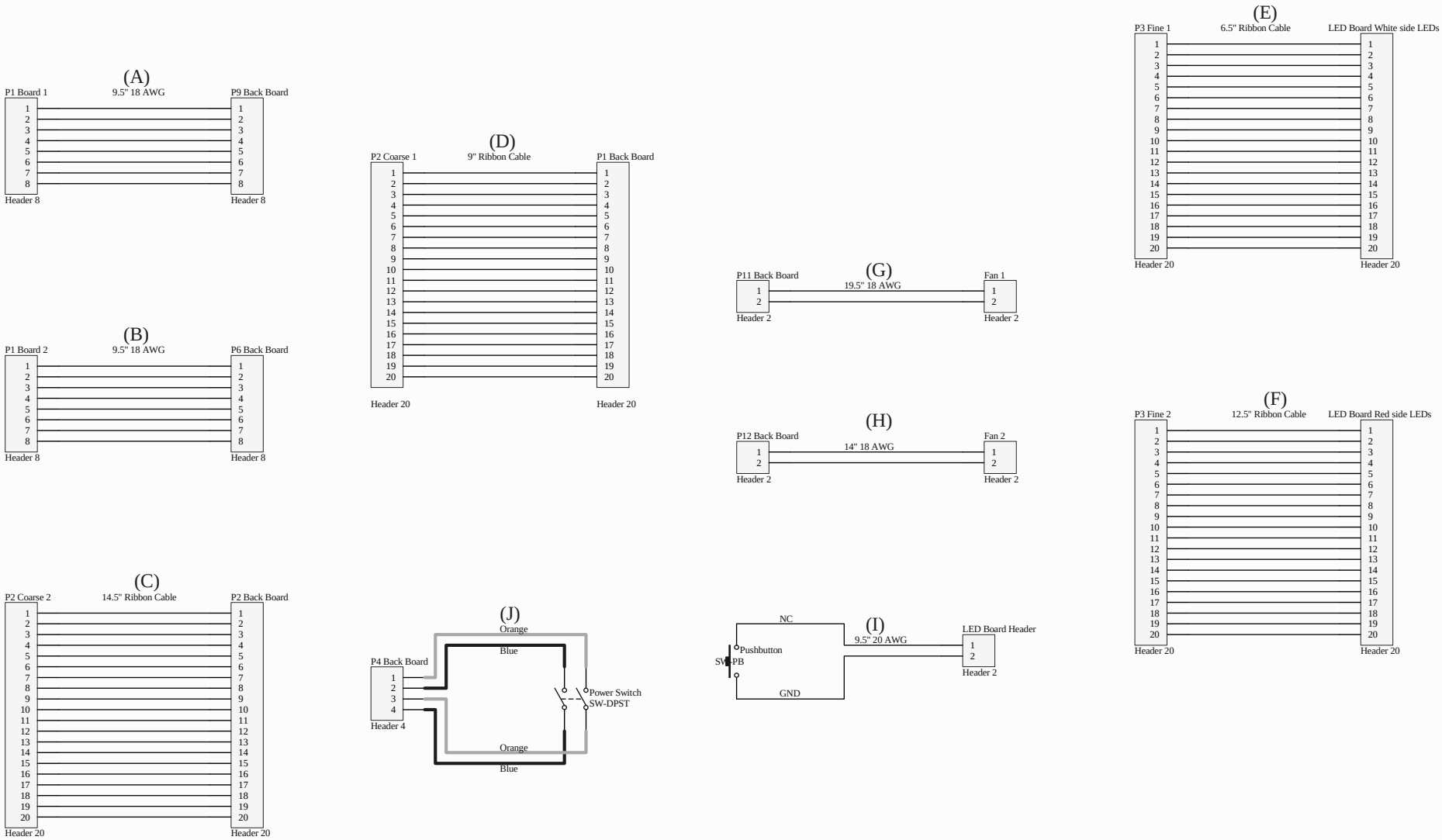

Title **Coil Driver Cables**			*LIGO Project* *California Institute of Technology* *Massachusetts Institute of Technology*	LIGO
Size: B	DCC Number: *	SCH / PCB Revision: *	Engineer: * Sam Abbott	Date: 7/1/2010 Time: 9:46:11 AM
File: C:\Documents and Settings\sabbott\My Documents\My Designs\Coil Driver cables.SchDoc				Sheet * of *