| REV. | DATE | DCN # | DRAWING TREE # |
|---|---|---|---|
| v1 | 14 Feb. 2010 | E1000028 | E1000025 |
| v2 | 20 May. 2010 | E1000174 | E1000025 |
| | | | |

**NOTES CONTINUED:**

5. SCRIBE, ENGRAVE, OR MECHANICALLY STAMP (NO INKS OR DYES) DRAWING PART NUMBER, REVISION (AND VARIANT OR "TYPE" IF APPLICABLE) ON NOTED SURFACE OF PART FOLLOWED ON THE NEXT LINE WITH A THREE DIGIT SERIAL NUMBER. SERIAL NUMBERS START AT 001 FOR THE FIRST ARTICLE AND PROCEED CONSECUTIVELY. USE MINIMUM 0.12" HIGH CHARACTERS, UNLESS THE SIZE OF THE PART DICTATES SMALLER CHARACTERS. A VIBRATORY TOOL MAY BE USED. EXAMPLE: DXXXXXXX-VY, TYPE-XX, S/N XXX
6. ALL PARTS SHALL BE MANUFACTURED IN ACCORDANCE WITH LIGO SPECIFICATION E0900364.
7. APPROXIMATE WEIGHT: 0.2LB.
8. MACHINE ALL SURFACES TO REMOVE OXIDES AND MILL FINISH.
9. ABRASIVE REMOVAL TECHNIQUES ARE NOT ACCEPTABLE.
10. TAP .004 - .006 OVERSIZE

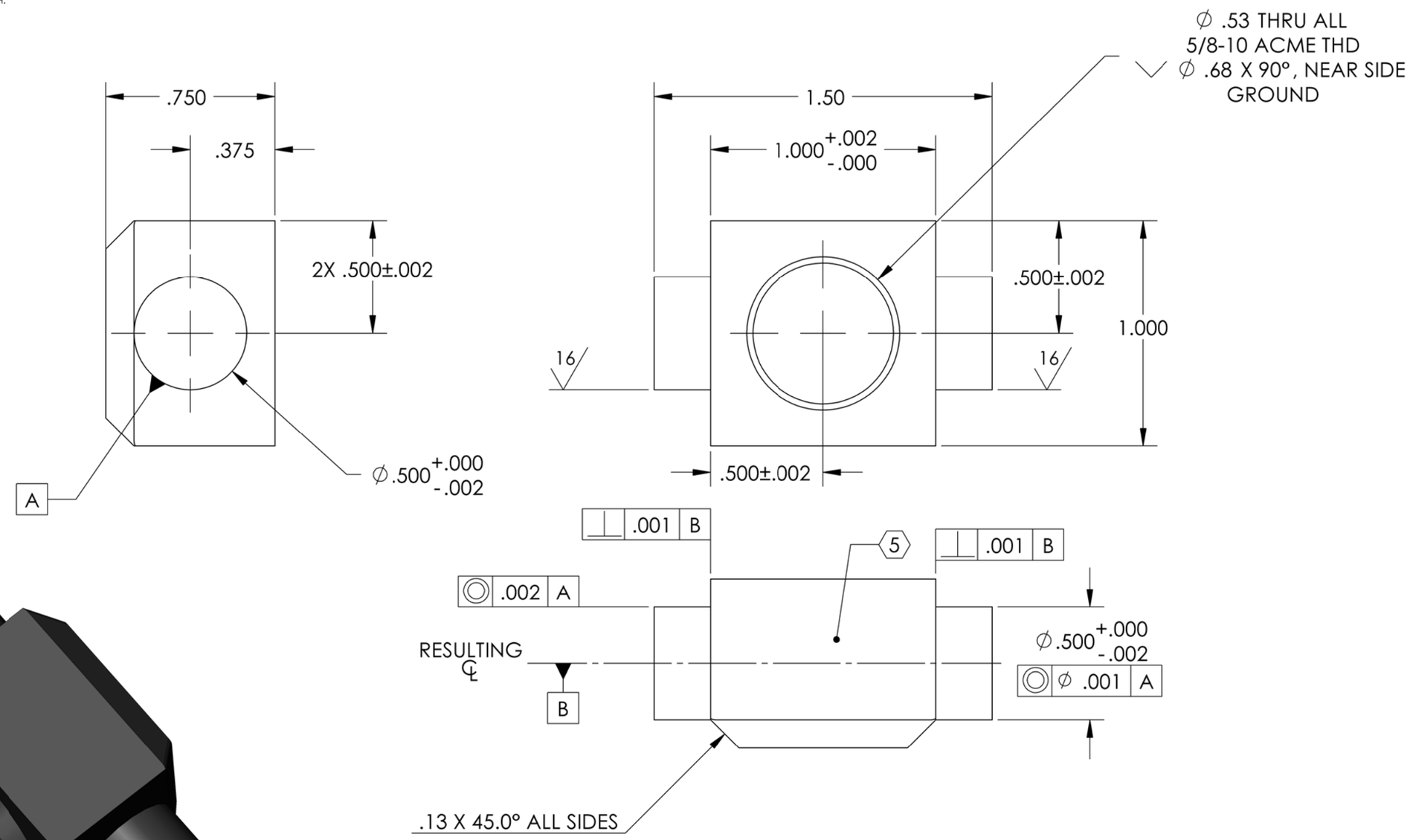


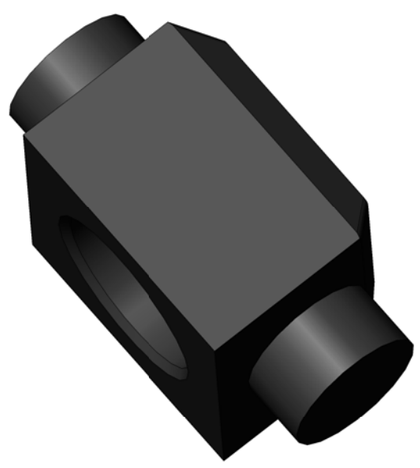

**NOTES AND TOLERANCES: (UNLESS OTHERWISE SPECIFIED)**

DIMENSIONS ARE IN INCHES

TOLERANCES:
.XX ± .015
.XXX ± .005

ANGULAR ± .5°

1. INTERPRET DRAWING PER ASME Y14.5-1994.
2. REMOVE ALL SHARP EDGES, R.02 MIN.
3. DO NOT SCALE FROM DRAWING.
4. ALL MACHINING FLUIDS MUST BE FULLY SYNTHETIC, FULLY WATER SOLUBLE AND FREE OF SULFUR, SILICONE, AND CHLORINE.

MATERIAL: NITRONIC 60

FINISH: 32 µinch

LIGO — CALIFORNIA INSTITUTE OF TECHNOLOGY, MASSACHUSETTS INSTITUTE OF TECHNOLOGY

SYSTEM: ADVANCED LIGO

SUB-SYSTEM: SEI

NEXT ASSY: D0902464

PART NAME: THREADED PIVOT, STAGE 0-1 BLADE PUSHER, aLIGO BSC-ISI

| | | | | |
|---|---|---|---|---|
| DESIGNER | S.BARNUM | 09 Feb. 2010 | SIZE: B | DWG. NO.: D0902594 |
| DRAFTER | M.HILLARD | 14 FEB 2010 | | REV.: v2 |
| CHECKER | F.MATICHARD | 14 FEB 2010 | | |
| APPROVAL | K.MASON | 14 FEB 2010 | SCALE: 2:1 | PROJECTION: |

SHEET 1 OF 1

D0902594 Threaded Pivot, Stage 0-1 Blade Pusher, aLIGO BSC-ISI, PART PDM REV: X-007, DRAWING PDM REV: X-005