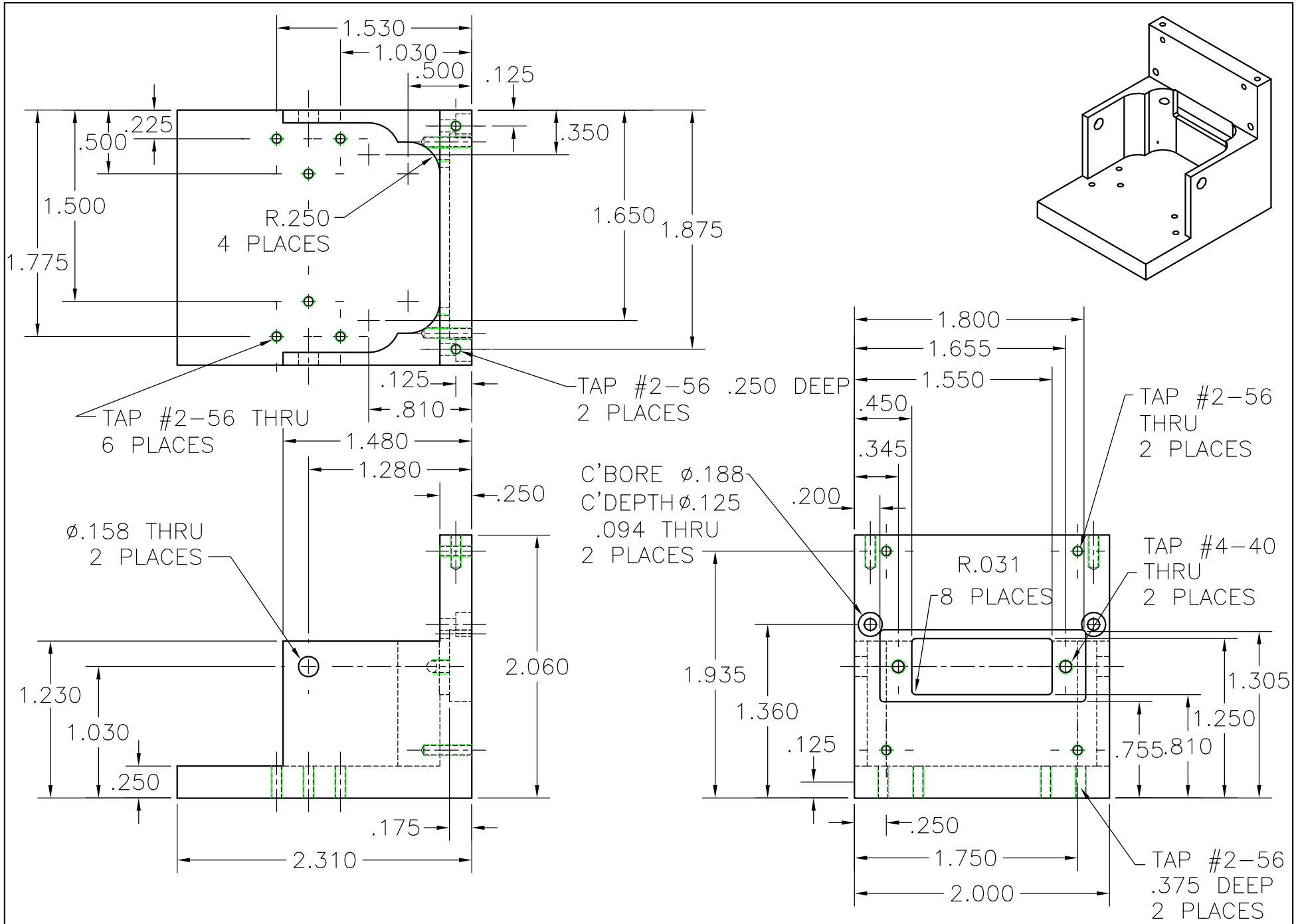

UF LIGO	ALIGO IO EOM	SCALE: NTS (INCHES)	DATE: SEPTEMBER 14, 2009
WILLIAMS, LUKE	BOX LOWER	D0902172-v1	MATERIAL: 6061-T6