REV.	DATE	DCN #	DRAWING TREE #
v1	01 Mar. 2010	E1000026	E1000025
v2	22 June 2010	E1000225	E1000025

NOTES CONTINUED:

(5) SCRIBE, ENGRAVE, OR MECHANICALLY STAMP (NO INKS OR DYES) DRAWING PART NUMBER, REVISION (AND VARIENT OR "TYPE" IF APPLICABLE ON NOTED SURFACE OF PART FOLLOWED ON THE NEXT LINE WITH A THREE DIGIT SERIAL NUMBER. SERIAL NUMBERS START AT 001 FOR THE FIRST ARTICLE AND PROCEED CONSECUTIVELY. USE MINIMUM 0.12 HIGH CHARACTERS, UNLESS THE SIZE OF THE PART DICTATES SMALLER CHARACTERS. A VIBRATORY TOOL MAY BE USED. EXAMPLE DXXXXXXX-VY, TYPE-XX, S/N XXX.

6. APPROXIMATE WEIGHT = 1.30 LB.
7. MACHINE ALL SURFACES TO REMOVE OXIDES AND MILL FINISH, USE OF ABRASIVE REMOVAL TECHNIQUES (INCLUDING SANDING OR SCOURING FOR MATTE FINISH) IS NOT ALLOWED.
8. ALL PARTS SHALL BE MANUFACTURED IN ACCORDANCE WITH LIGO SPECIFICATION E0900364.

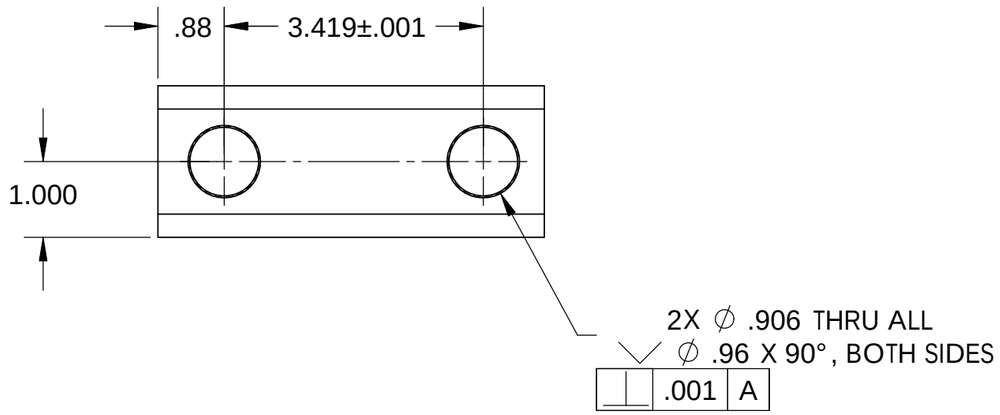

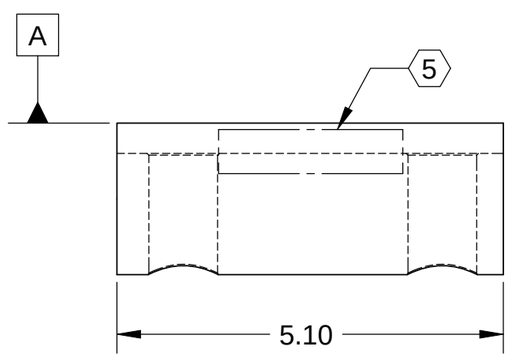

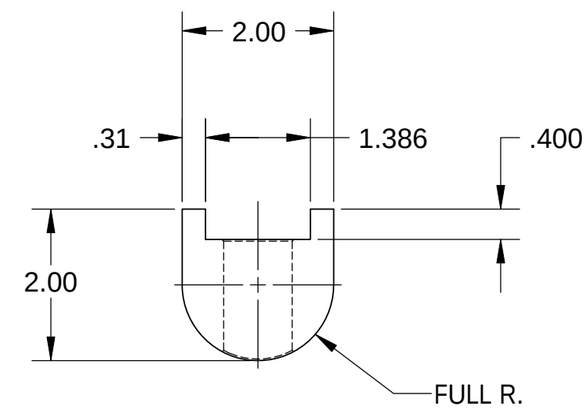

NOTES AND TOLERANCES: (UNLESS OTHERWISE SPECIFIED)

DIMENSIONS ARE IN INCHES

TOLERANCES:
.XX ± .015
.XXX ± .005

ANGULAR ± 0.5°

1. INTERPRET DRAWING PER ASME Y14.5-1994.
2. REMOVE ALL SHARP EDGES, R.02 MIN.
3. DO NOT SCALE FROM DRAWING.
4. ALL MACHINING FLUIDS MUST BE FULLY SYNTHETIC, FULLY WATER SOLUBLE AND FREE OF SULFUR, SILICONE, AND CHLORINE.

MATERIAL: 6061-T6 Al

FINISH: 63 µinch

LIGO — CALIFORNIA INSTITUTE OF TECHNOLOGY, MASSACHUSETTS INSTITUTE OF TECHNOLOGY

SYSTEM: ADVANCED LIGO

SUB-SYSTEM: SEI

NEXT ASSY: D0902164

PART NAME: Cap for Blade Safety Mechanism

DESIGNER	A.LEROUX	01 Feb. 2010
DRAFTER	M.HILLARD	01 Feb. 2010
CHECKER	F.MATICHARD	01 Feb. 2010
APPROVAL	K.MASON	01 Feb. 2010

SIZE: B — DWG. NO.: D0902165 — REV.: v2

SCALE: 1:2 — PROJECTION: — SHEET 1 OF 1

D0902165 Cap for Blade Safety Mechanism, PART PDM REV: X-010, DRAWING PDM REV: X-008