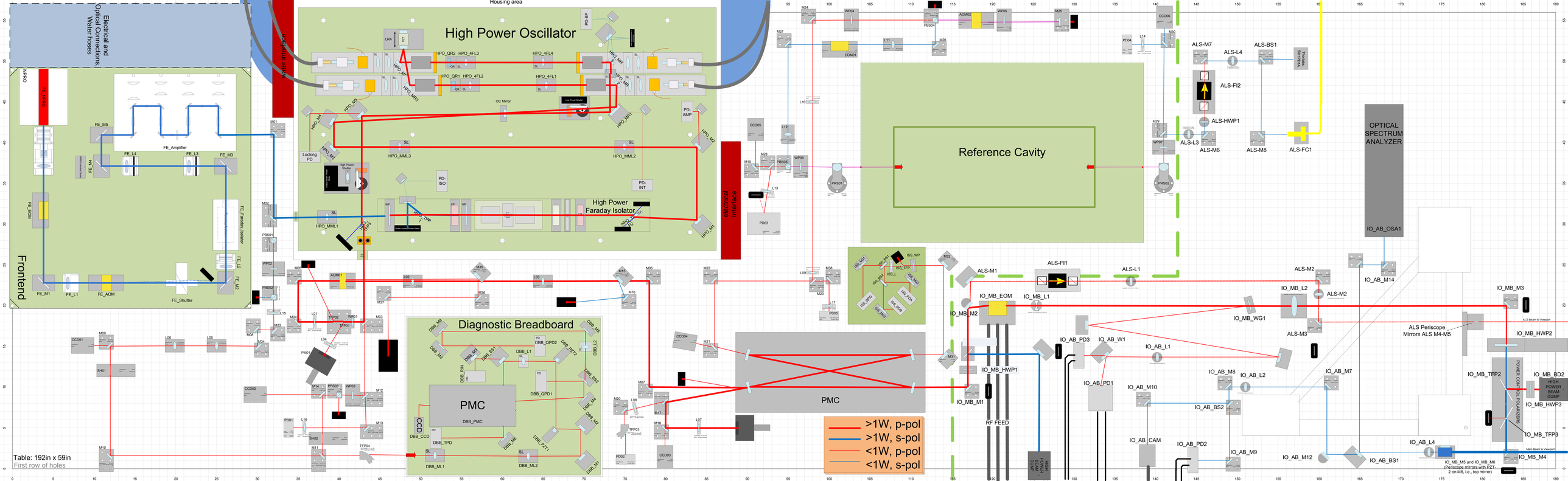
Housing area
Electrical and Optical Connections, Water hoses
Water interface
High Power Oscillator
electrical interface
Reference Cavity
OPTICAL SPECTRUM ANALYZER
Frontend
Diagnostic Breadboard
PMC
High Power Faraday Isolator
>1W, p-pol
>1W, s-pol
<1W, p-pol
<1W, s-pol
Table: 192in x 59in
First row of holes