INTRALINK NAME: D080008

REV.	DATE	DCN #	DRAWING TREE #
-	-	-	-

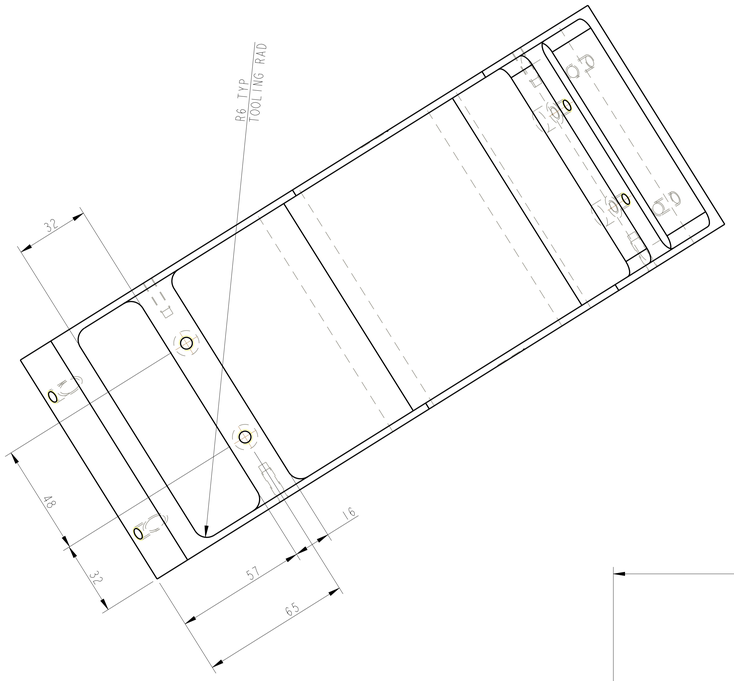

VIEW ON ARROW Y

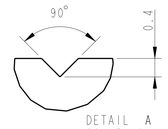

DETAIL A
SCALE 20:1
2 POSITIONS

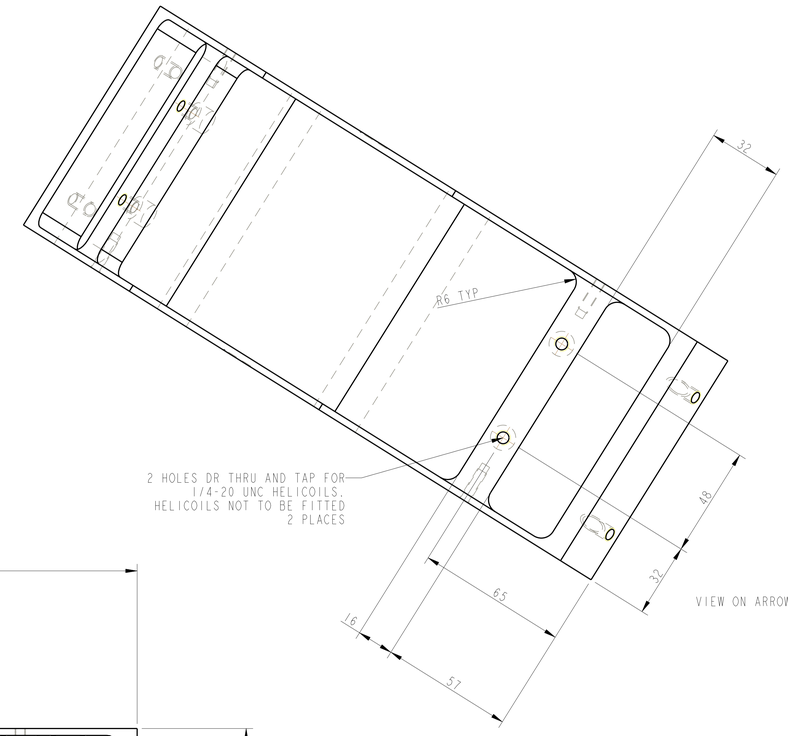

VIEW ON ARROW Z

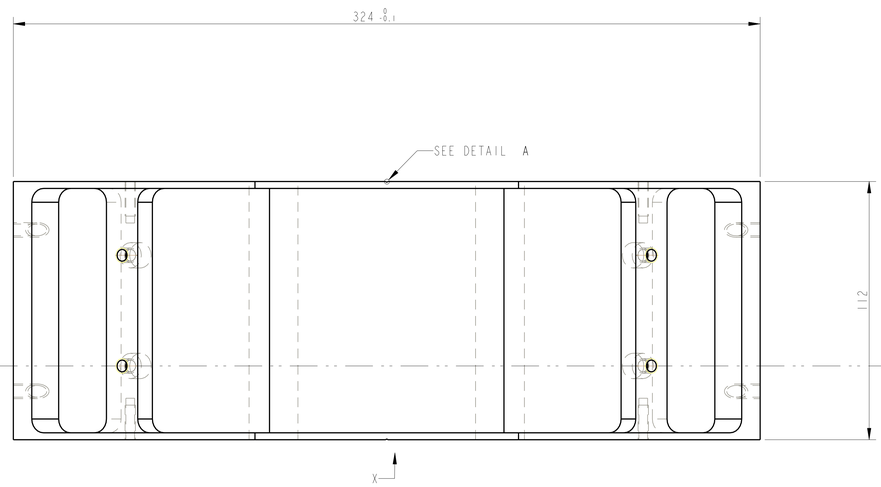

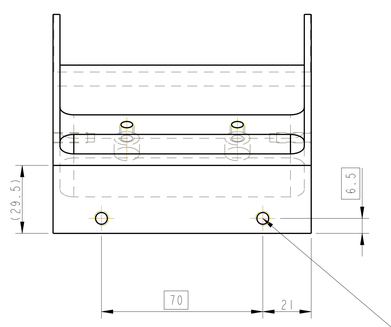

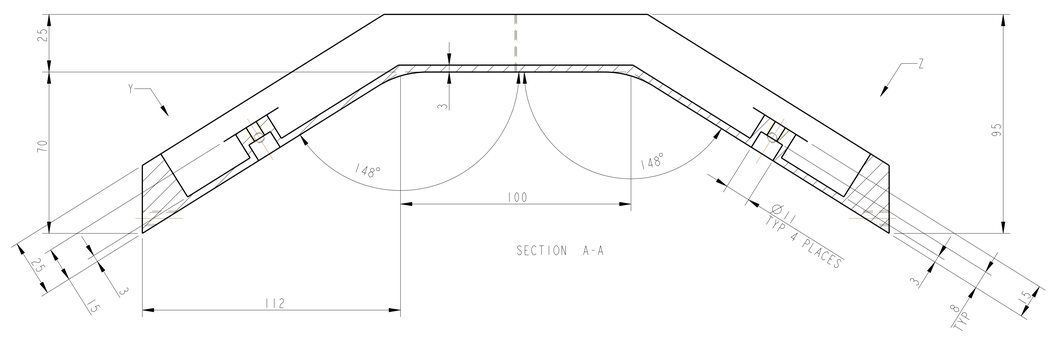

SECTION A-A

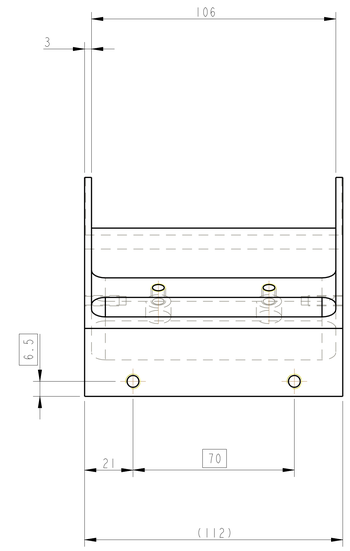

2 HOLES DR THRU &
TAP 1/4 - 20 UNC, 0.005" OVERSIZE
TYP 2 PLACES
⌖ Ø0.2

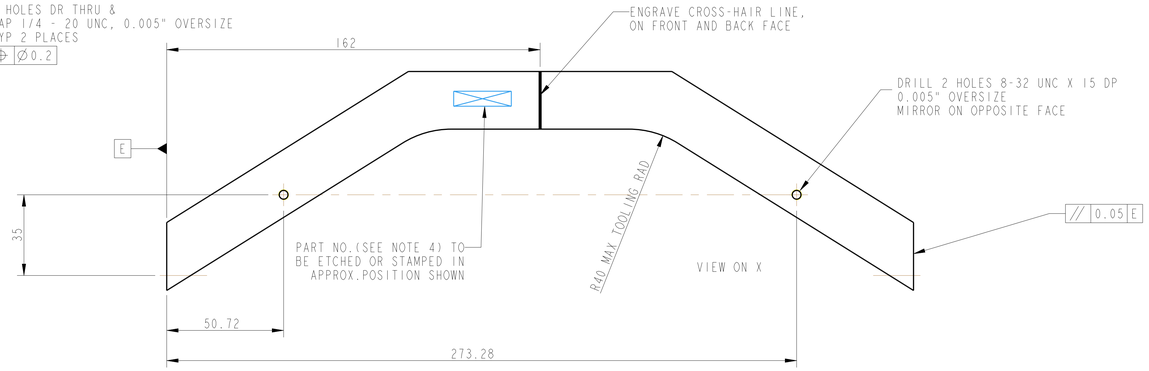

NOTES: (UNLESS OTHERWISE SPECIFIED)

1. REMOVE ALL SHARP EDGES, 0.02 MIN.
2. DO NOT SCALE FROM DRAWING.
3. ALL MACHINING FLUIDS SHALL BE WATER SOLUBLE AND NON-ABRASIVE. SILICONE AND SILICONE, SUCH AS CINCINNATI MILACRON'S CIMTECH 410 (STAINLESS STEEL)
4. SCRIBE, ENGRAVE OR STAMP DRAWING NUMBER, SERIAL NUMBER, PART NAME AND THREE DIGIT SERIAL NUMBER. SERIAL NUMBERS START AT 001 FOR THE FIRST PART AND PROCEED CONSECUTIVELY. USE .1" HIGH CHARACTERS. EXAMPLE: D080148- 001. A VIBRATORY TOOL MAY BE USED.

DIMENSIONS ARE IN mm (INCHES) TOLERANCES: X.XX ±0.2 mm (INCHES) ANGULAR ±0.25°		
MATERIAL:	AL ALLOY 6061 OR 5083	
FINISH: m (µin)	CLEAN, GREASE FREE Ra = 1.6	
	NAME	DATE
DRAWN	J.D.DELL	DEC 2007
CHECKED	A.W.	JAN 2008
APPROVED	JDD	JAN 2008

LIGO CALIFORNIA INSTITUTE OF TECHNOLOGY
MASSACHUSETTS INSTITUTE OF TECHNOLOGY
LIGO - LASER INTERFEROMETER GRAVITATIONAL WAVE OBSERVATORY
HAMMOND ARPLETON LABORATORIES

SYSTEM	ADVANCED LIGO
SUB-SYSTEM	SUS
NEXT ASSY	D080005
PART NAME	BS LOWER STRUCTURE LWR EQ STOP PLATE
SIZE	E
DRG. NO.	D080008
REV	E
SCALE (:) PROJECTION	SHEET 1 OF 1