INTRALINK NAME: D060462

REV	DATE	DCN #	DRAWING TREE #
A	30-OCT-06	E060260-00	-
B	21/DEC/07	E060260-B	-
C	28/JULY/08	E080465	
D	9/SEPT/08	E080473	

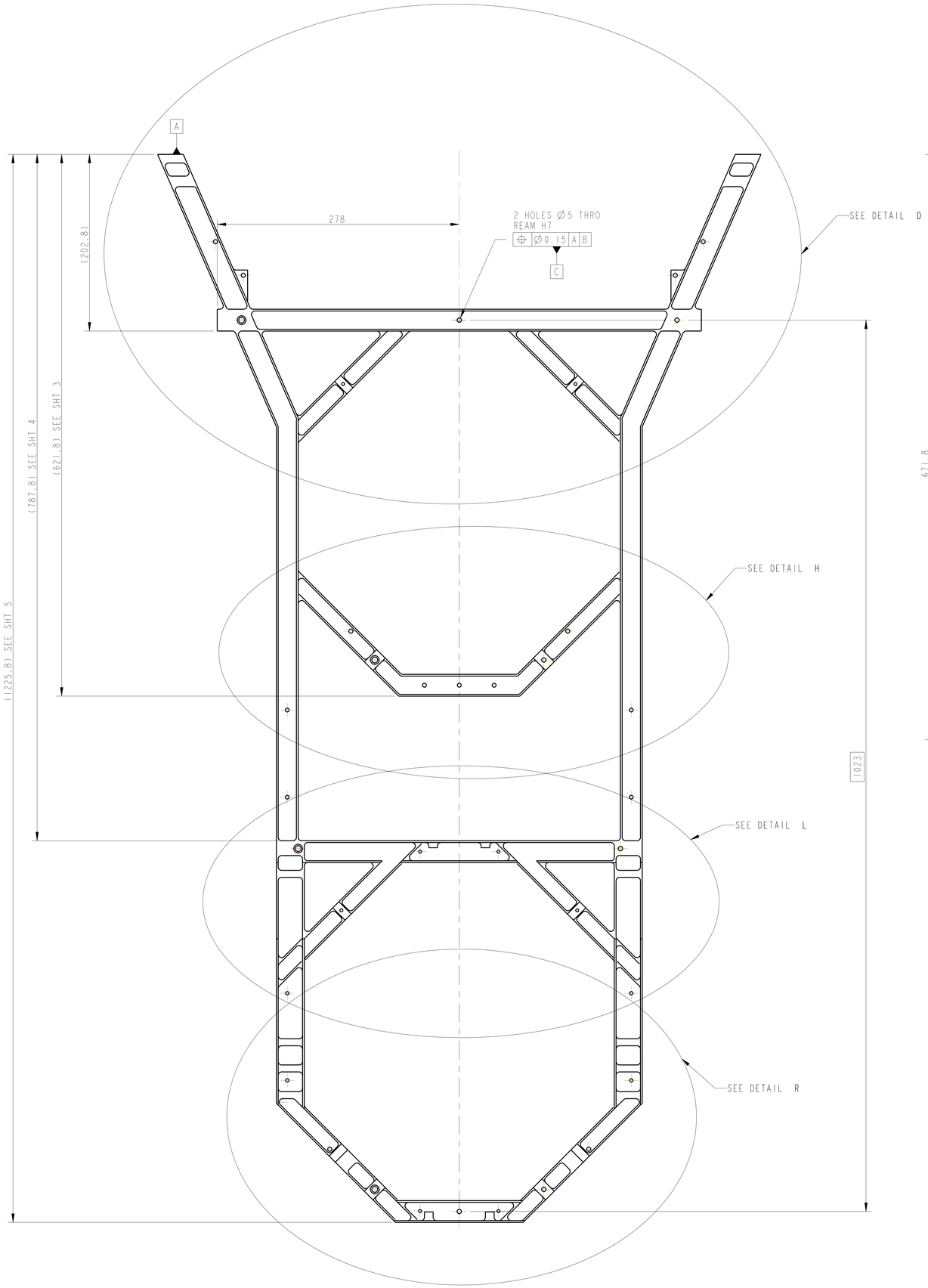

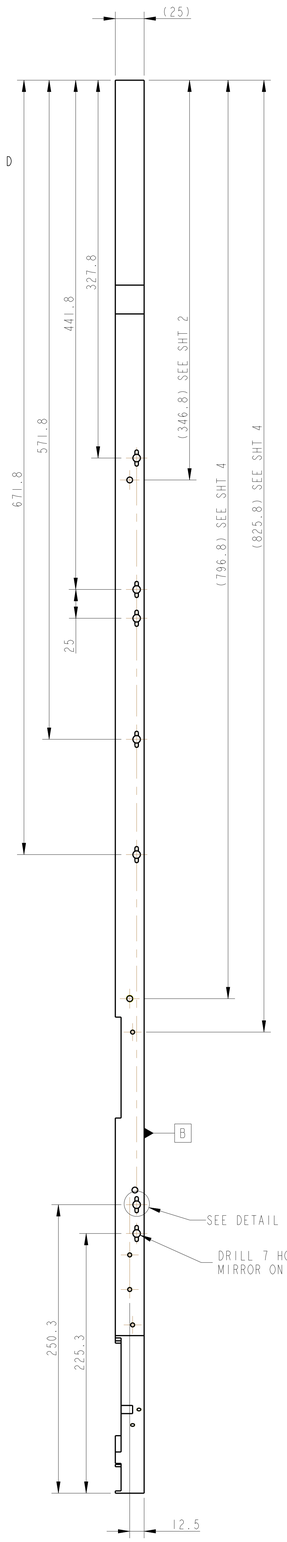

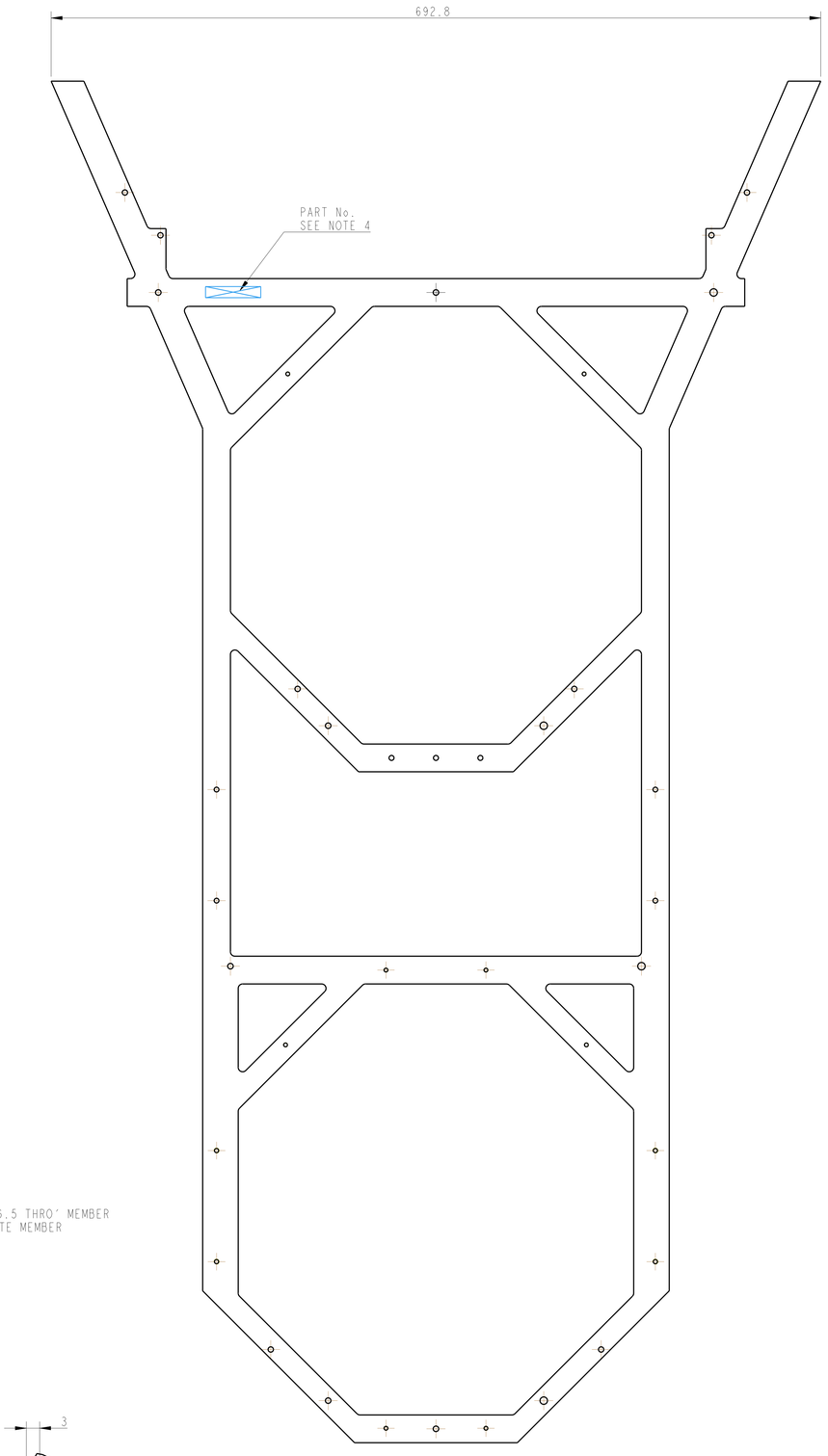

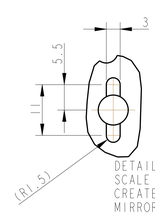

DETAIL A
SCALE 2:1
CREATE SLOT DETAIL THRO' FIRST WALL
MIRROR ON OPPOSITE FACE

NOTES: (UNLESS OTHERWISE SPECIFIED)
1. REMOVE ALL SHARP EDGES. R.02 MIN.
2. DO NOT SCALE FROM DRAWING.
3. ALL MACHINING FLUIDS SHALL BE WATER SOLUBLE AND FREE OF SULFUR, CHLORINE AND SILICONE, SUCH AS CINCINNATI MILACRON'S CIMTECH 410 (STAINLESS STEEL).
4. STAMP, ENGRAVE OR STAMP DRAWING PART NUMBER, SERIAL NUMBER, PART AND A THREE DIGIT SERIAL NUMBER. SERIAL NUMBERS START AT 001 FOR THE FIRST PART AND PROCEED CONSECUTIVELY. EXAMPLE: D060462-001. EXAMPLE: D060462-001. A VIBRATORY TOOL MAY BE USED.

DIMENSIONS ARE IN mm [INCHES]
TOLERANCES.
X.XX ±0.2 mm [INCHES]
ANGULAR ±0.25°
MATERIAL: ALUMINUM ALLOY 6061
FINISH: CLEAN AND DEGREASED
m-Grid Ra = 1.6

	NAME	DATE
DRAWN	C. DELL	18/OCT/06
CHECKED	MB	1/MAR/07
APPROVED	JOD	1/MAR/07

LIGO CALIFORNIA INSTITUTE OF TECHNOLOGY
MASSACHUSETTS INSTITUTE OF TECHNOLOGY
LIGO - GLASGOW UNIVERSITY GEO 600 GROUP
RUTHERFORD APPLETON LABORATORIES

SYSTEM aLIGO
SUB-SYSTEM SUS
NEXT ASSY. QUAD LOWER STRUCTURE
PART NAME INNER FACE PLATE
LOWER STRUCTURE
SIZE E
DRG. NO. D060462
REV H
SCALE 1:2 PROJECTION
SHEET 1 OF 1

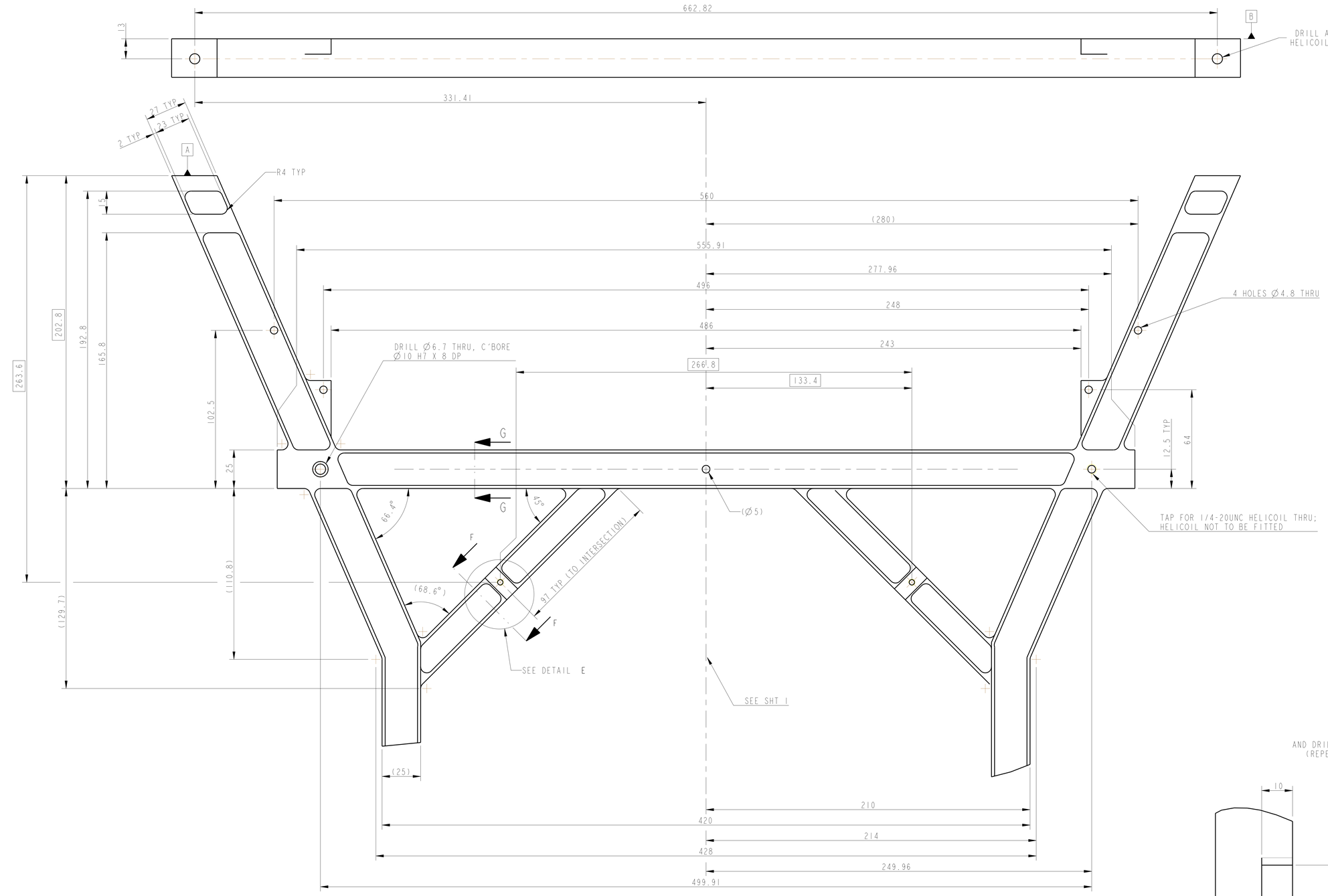

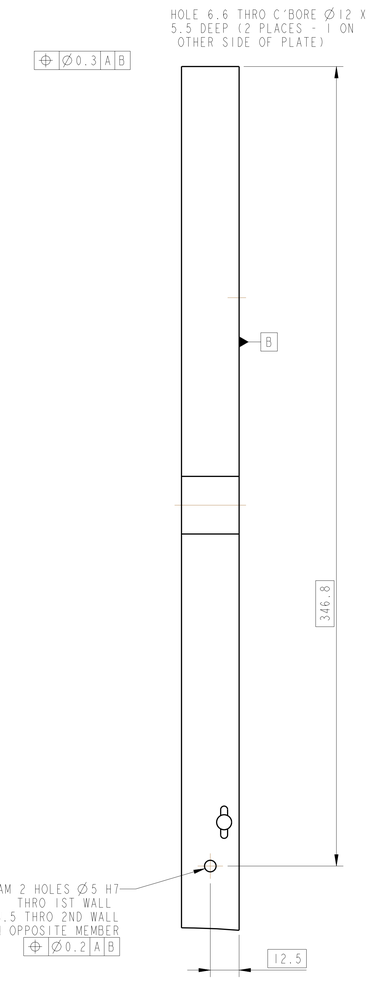

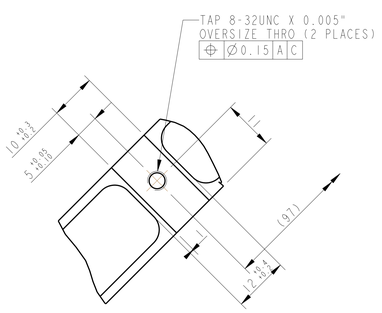

DETAIL E
SHOWING HOLE DETAILS
SCALE 2:1

DETAIL D
(SEE SHT 1)
SCALE 1:1

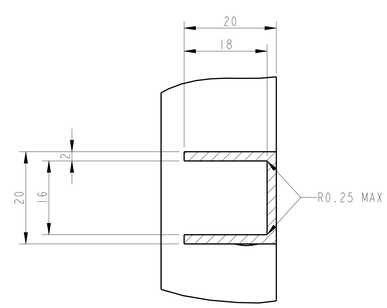

SECTION F-F
SCALE 2:1

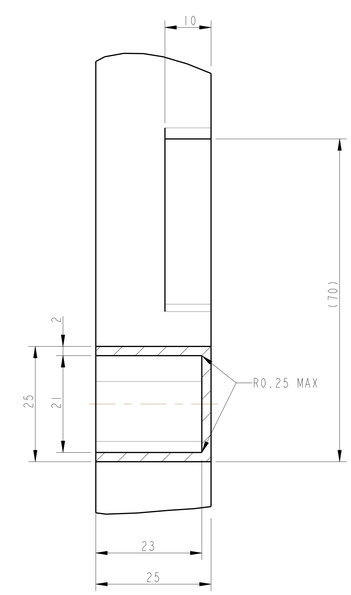

PARTIAL SECTION G-G
SHOWING DEPTH OF SECTION
SCALE 2:1

NOTES: (UNLESS OTHERWISE SPECIFIED)
1. REMOVE ALL SHARP EDGES, 0.02 MIN.
2. DO NOT SCALE FROM DRAWING.
3. ALL MACHINING FLUIDS SHALL BE WATER BASED, FREE OF SULFUR, CHLORINE AND SILICONE, SUCH AS CINCINNATI MILACRON S-CUTTECH 410 (STAINLESS STEEL).
4. SCRIBE, ENGRAVE OR STAMP DRAWING NUMBER, SERIAL NUMBER AND PART NUMBER THREE DIGITS SERIAL NUMBER. (SERIAL NUMBERS START AT 001 FOR THE FIRST PART AND PROCEED CONSECUTIVELY). USE .37" HIGH CHARACTERS. EXAMPLE: D020100-001. A HIBERTONY TOOL MAY BE USED.

DIMENSIONS ARE IN mm [INCHES]
TOLERANCES:
X.XX ±0.2 mm [INCHES]
ANGULAR ±0.25°

MATERIAL: ALUMINUM ALLOY 6061
FINISH: CLEAN AND DEGREASED
m [µin] Ra : 1.6

	NAME	DATE
DRAWN	J O'DELL	10/10/14
CHECKED	MR	11/MAY/15
APPROVED	JOO	11/MAY/15

CALIFORNIA INSTITUTE OF TECHNOLOGY
MASSACHUSETTS INSTITUTE OF TECHNOLOGY
LIGO IGR, BLACKER LAB, MIT, 185 DEL MAR
OATHEDRAL APPLETON LABORATORIES

SYSTEM aLIGO
SUB-SYSTEM SUS
NEXT ASSY QUAD LOWER STRUCTURE
PART NAME INNER FACE PLATE
LOWER STRUCTURE

SIZE E DRG. NO. D060462 REV H
SCALE 1:2 PROJECTION SHEET 2 OF 4

INTRALINK NAME: D060462

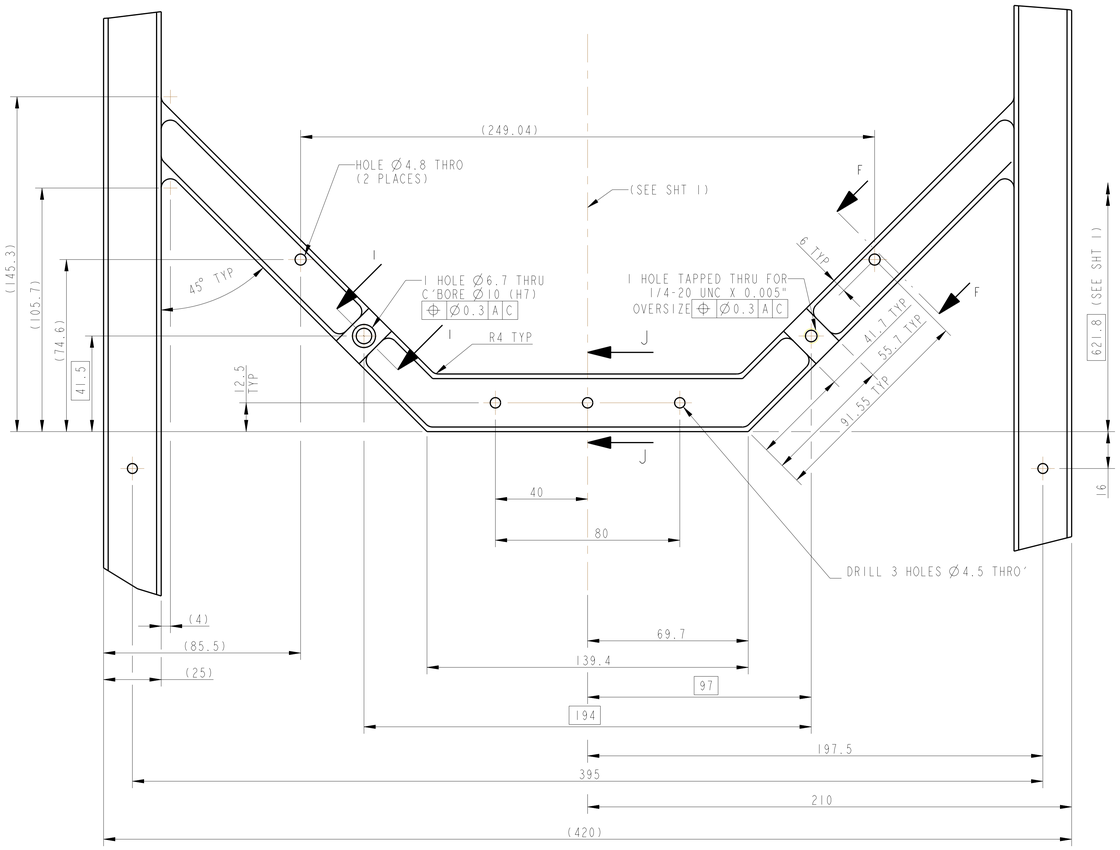

DETAIL H
(SEE SHT 1)
SCALE 1:1

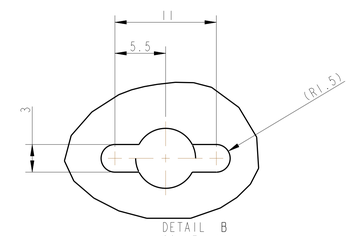

DETAIL B
SCALE 4:1
TYP

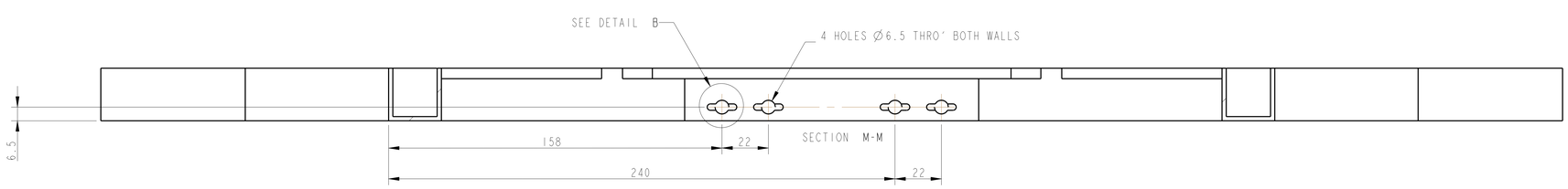

SECTION M-M

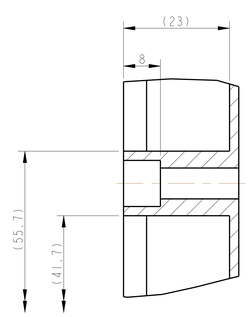

PARTIAL SECTION I-I
SCALE 2:1

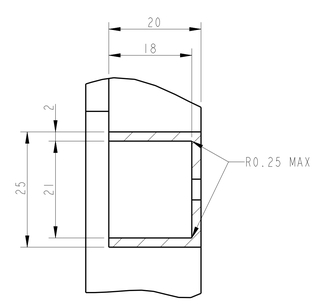

PARTIAL SECTION J-J
SHOWING DEPTH OF SECTION
SCALE 2:1

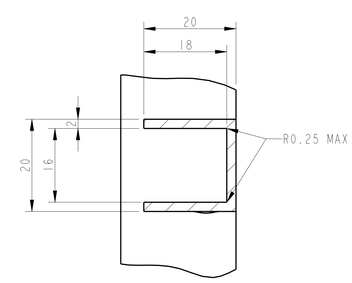

SECTION F-F
SCALE 2:1

NOTES: (UNLESS OTHERWISE SPECIFIED)

1. REMOVE ALL SHARP EDGES, 0.3 MAX.
2. DO NOT SCALE FROM DRAWING.
3. ALL MACHINING FLUIDS SHALL BE WATER SOLUBLE AND FREE OF SULFUR, CHLORINE AND SILICONE, SUCH AS CINCINNATI MILACRON'S ACCUCUT 250 OR EQUIVALENT.
4. SERIES, ENGRAVE OR STAMP DRAWING PARTNUMBER ON NOTED SURFACE OF PART AND A THREE DIGIT SERIAL NUMBER. SERIAL NUMBERS START AT 001 FOR THE FIRST PART AND PROCEED THROUGH 999. USE .125" HIGH CHARACTERS. EXAMPLE: D020100 001. A VIBRATORY TOOL MAY BE USED.

DIMENSIONS ARE IN mm [INCHES]
TOLERANCES:
X.XX ±0.2 mm [INCHES]
ANGULAR ±0.25

MATERIAL: ALUMINIUM ALLOY 6061

FINISH: CLEAN AND DEGREASED
m (µin): Ra = 1.6

	NAME	DATE
DRAWN	J. DELL	16/06/04
CHECKED	MB	1/3/06
APPROVED	JOD	1/3/06

LIGO
CALIFORNIA INSTITUTE OF TECHNOLOGY
MASSACHUSETTS INSTITUTE OF TECHNOLOGY
UNIV. GLASGOW UNIVERSITY GEO 600 GROUP
RUTHERFORD APPLETON LABORATORIES.

SYSTEM: aLIGO
SUB-SYSTEM: SUS
NEXT ASSY: QUAD LOWER STRUCTURE
PART NAME: INNER FACE PLATE
LOWER STRUCTURE

SIZE: E
DRG. NO.: D060462
REV: H

SCALE 1:2 PROJECTION: 1 SHEET 2 OF 2

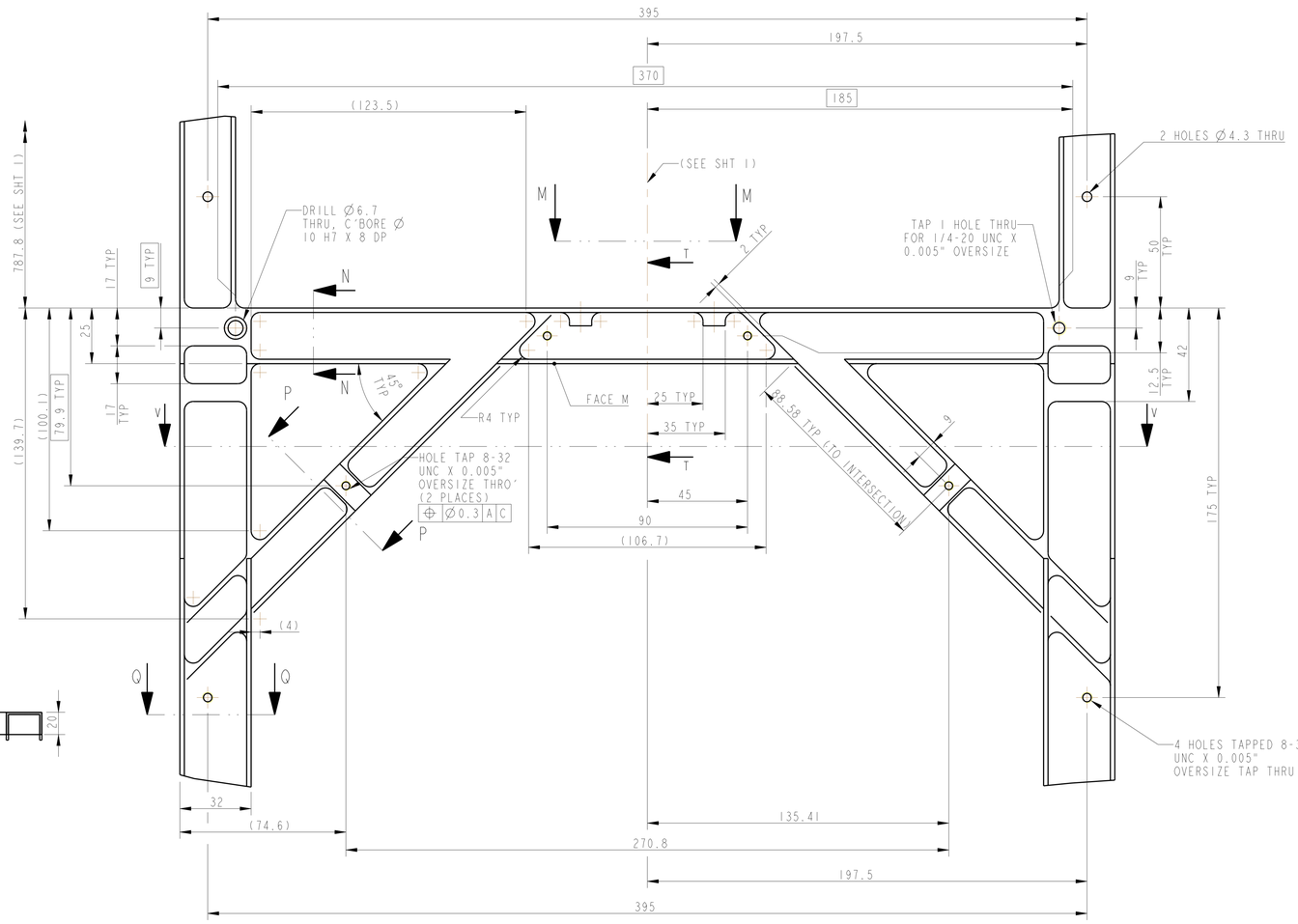

SECTION V-V

DETAIL L
(SEE SHT 1)
SCALE 1:1

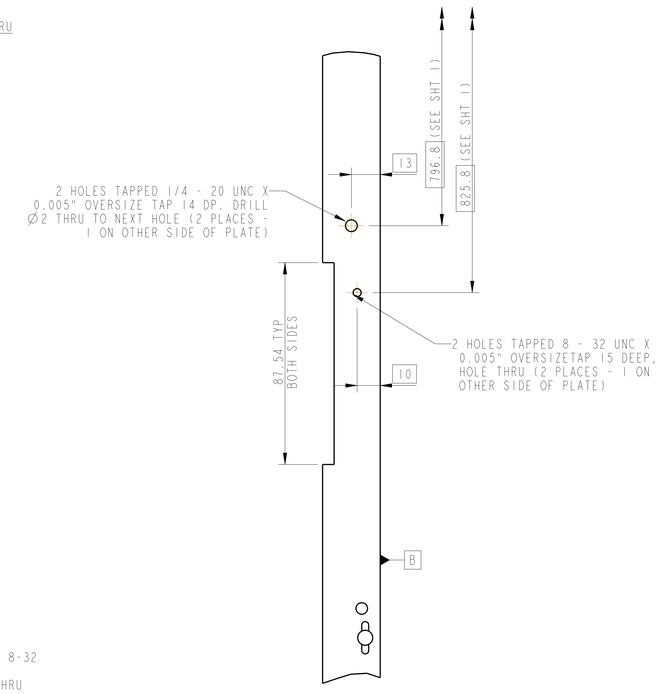

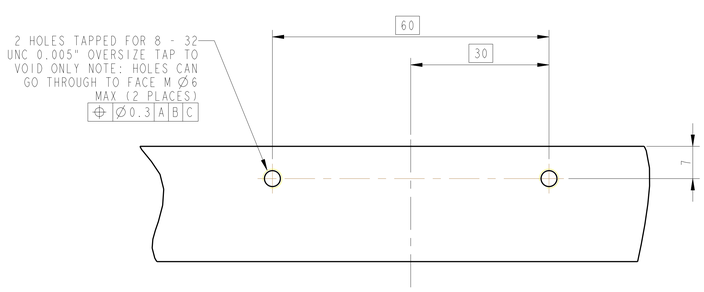

PARTIAL SECTION M-M
SHOWING HOLE POSITIONS
SCALE 2:1

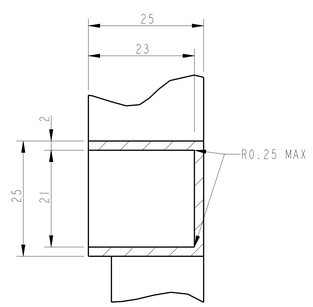

PARTIAL SECTION N-N
SHOWING DEPTH OF SECTION
SCALE 2:1

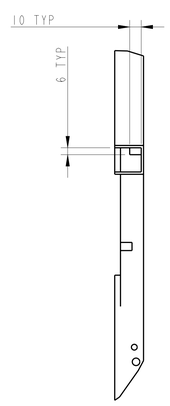

SECTION T-T

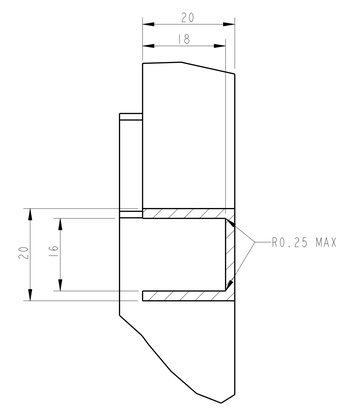

PARTIAL SECTION P-P
SHOWING DEPTH OF SECTION
SCALE 2:1

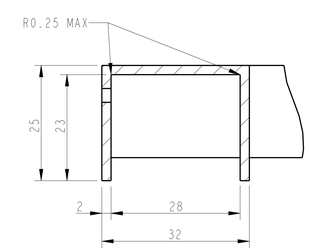

PARTIAL SECTION Q-Q
SHOWING DEPTH OF SECTION
SCALE 2:1

NOTES: (UNLESS OTHERWISE SPECIFIED)
1. REMOVE ALL SHARP EDGES, 0.32 MIN.
2. DO NOT SCALE FROM DRAWING.
3. ALL MACHINING FLUIDS SHALL BE WATER SOLUBLE AND FREE OF SULFUR, CHLORINE AND SILICONE. ALL PARTS SHALL BE PASSIVATED (UNITECH #10 STAINLESS STEEL).
4. SCRIBE, ENGRAVE OR STAMP DRAWING PARTNUMBER ON NOTED SURFACE OF PART AND A THREE DIGIT SERIAL NUMBER STARTING WITH 001 AT DOT FOR THE FIRST PART AND PROCEED CONSECUTIVELY. USE .5" HIGH CHARACTERS. EXAMPLE: D020188- 001. A VIBRATORY TOOL MAY BE USED.

DIMENSIONS ARE IN mm (INCHES) TOLERANCES: X.XX ±0.2 mm (INCHES) ANGULAR ±0.25°

MATERIAL: ALUMINUM ALLOY 6061

FINISH: CLEAN AND DEGREASED m (μin) Ra = 1.6

	NAME	DATE
DRAWN	J.O.DELL	18/08/04
CHECKED	MR	15/MAR/15
APPROVED	JOD	15/MAR/15

LIGO CALIFORNIA INSTITUTE OF TECHNOLOGY MASSACHUSETTS INSTITUTE OF TECHNOLOGY IGR, GLASGOW UNIVERSITY GEO 600 GROUP RUTHERFORD APPLETON LABORATORIES

SYSTEM aLIGO

SUB-SYSTEM SUS

NEXT ASST QUAD LOWER STRUCTURE

PART NAME INNER FACE PLATE LOWER STRUCTURE

SIZE E ORG. NO. D060462 REV H

SCALE 1:2 PROJECTION SHEET 1 OF 1

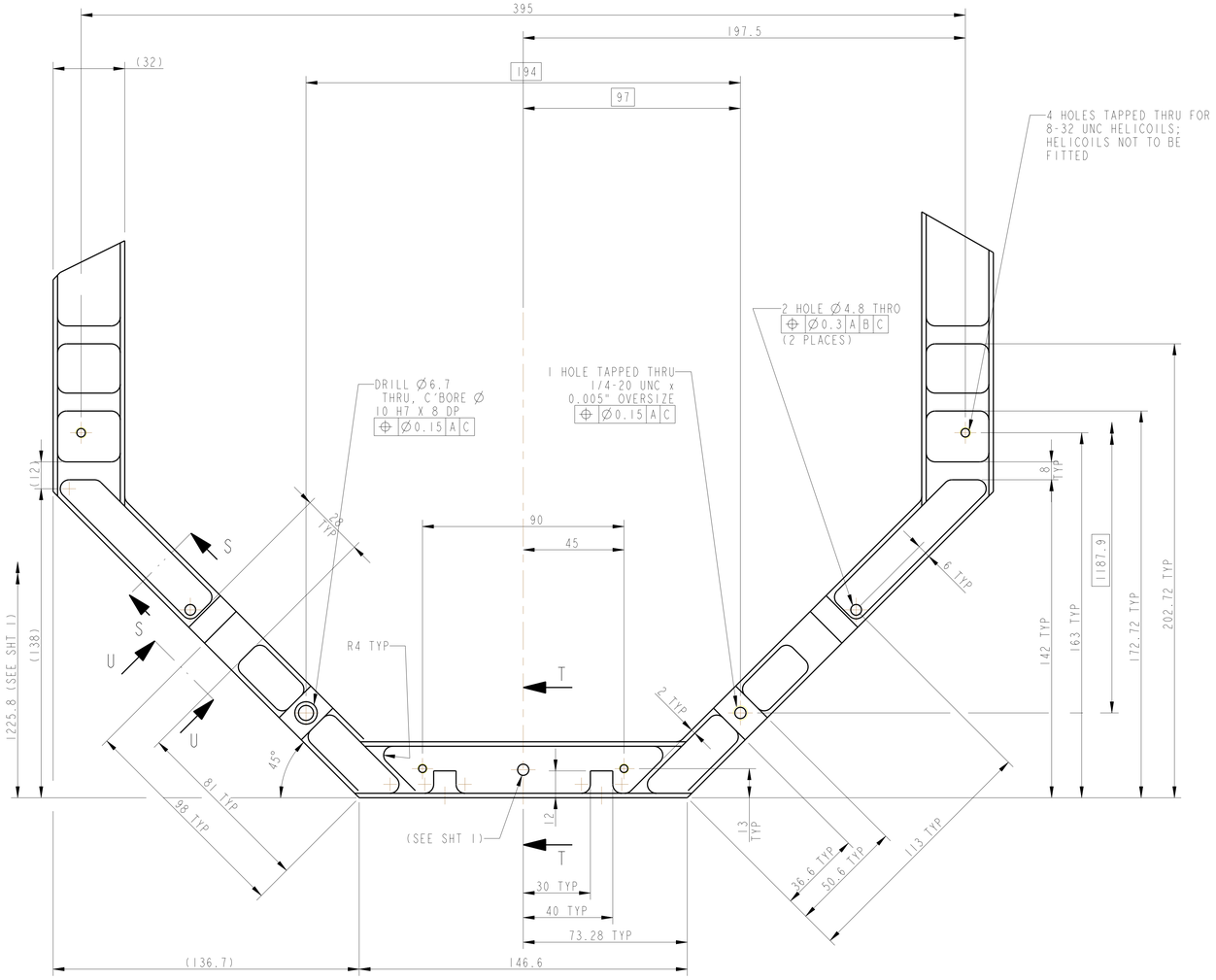

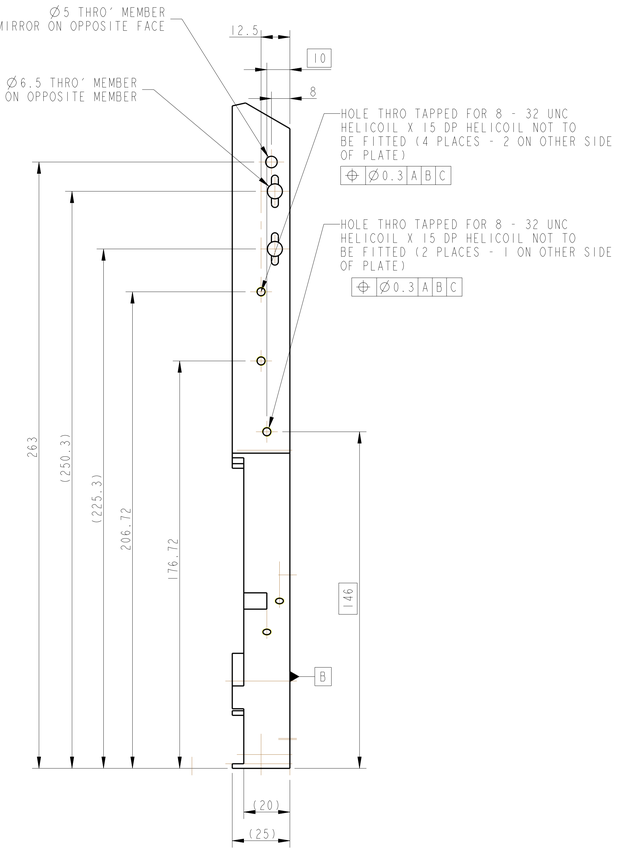

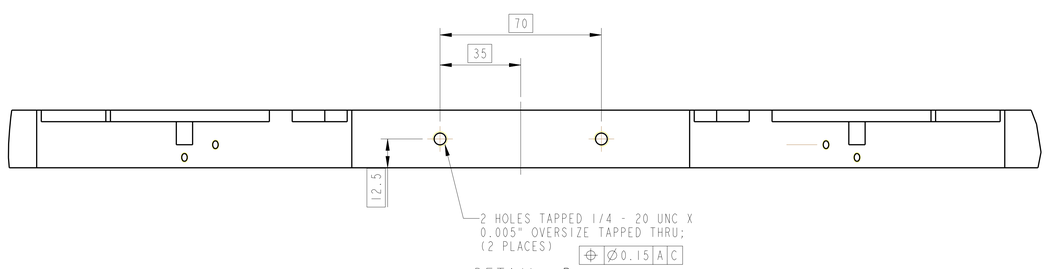

DETAIL R
(SEE SHT 1)
SCALE 1:1

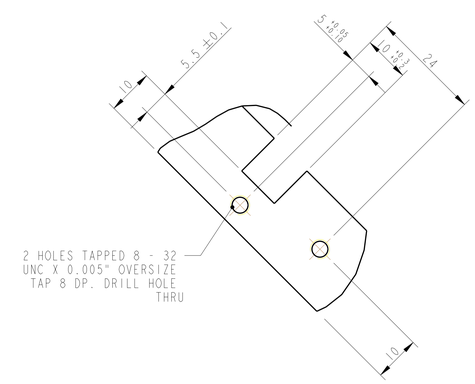

PARTIAL SECTION U-U
SHOWING HOLE POSITION
(TYP 2 PLACES)

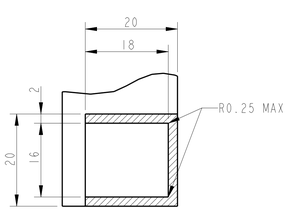

PARTIAL SECTION S-S
SHOWING DEPTH OF SECTION
SCALE 2:1

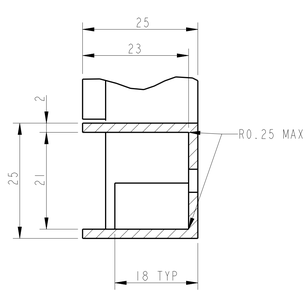

PARTIAL SECTION T-T
SHOWING DEPTH OF SECTION
SCALE 2:1

NOTES: (UNLESS OTHERWISE SPECIFIED)

1. REMOVE ALL SHARP EDGES, 0.02 MIN.
2. DO NOT SCALE FROM DRAWING.
3. ALL PARTS MUST ALSO BE WATER DOUBLE AND FREE OF SULFUR, CHLORINE AND SILICONE, SUCH AS CINCINNATI MILACRON'S CIMTECH 410 (STAINLESS STEEL)
4. ALL PARTS MUST HAVE PART NUMBER ON NOTED SURFACE OF PART AND A THREE DIGIT SERIAL NUMBER. SERIAL NUMBERS START AT 001 FOR THE FIRST PART AND INCREMENT BY ONE. USE 1/2" HIGH CHARACTERS. EXAMPLE: D020184- 001. A VIBRATORY TOOL MAY BE USED.

DIMENSIONS ARE IN mm (INCHES) TOLERANCES:
X.XX ±0.2 mm (INCHES)
ANGULAR ±0.25

MATERIAL: ALUMINIUM ALLOY 6082

FINISH: CLEAN AND DEGREASED m (µin)

	NAME	DATE
DRAWN	J.C.SELL	8/08/04
CHECKED	MK	1/MAR/10
APPROVED	JOD	1/MAR/10

LIGO — CALIFORNIA INSTITUTE OF TECHNOLOGY, MASSACHUSETTS INSTITUTE OF TECHNOLOGY, IGR, GLASGOW UNIVERSITY, GEO 600 GROUP, RUTHERFORD APPLETON LABORATORIES

SYSTEM aLIGO

SUB-SYSTEM SUS

NEXT ASSY QUAD LOWER STRUCTURE

PART NAME INNER FACE PLATE LOWER STRUCTURE

SIZE E — DRG. NO. D060462 — REV H.

SCALE 1:2 PROJECTION — SHEET 1 OF 1