INTRALINK NAME: D060455

| REV. | DATE | DCN # | DRAWING TREE # |
|---|---|---|---|
| A | 30-OCT-06 | E060260-00 | - |
| B | 21/DEC/07 | E060260-B | - |

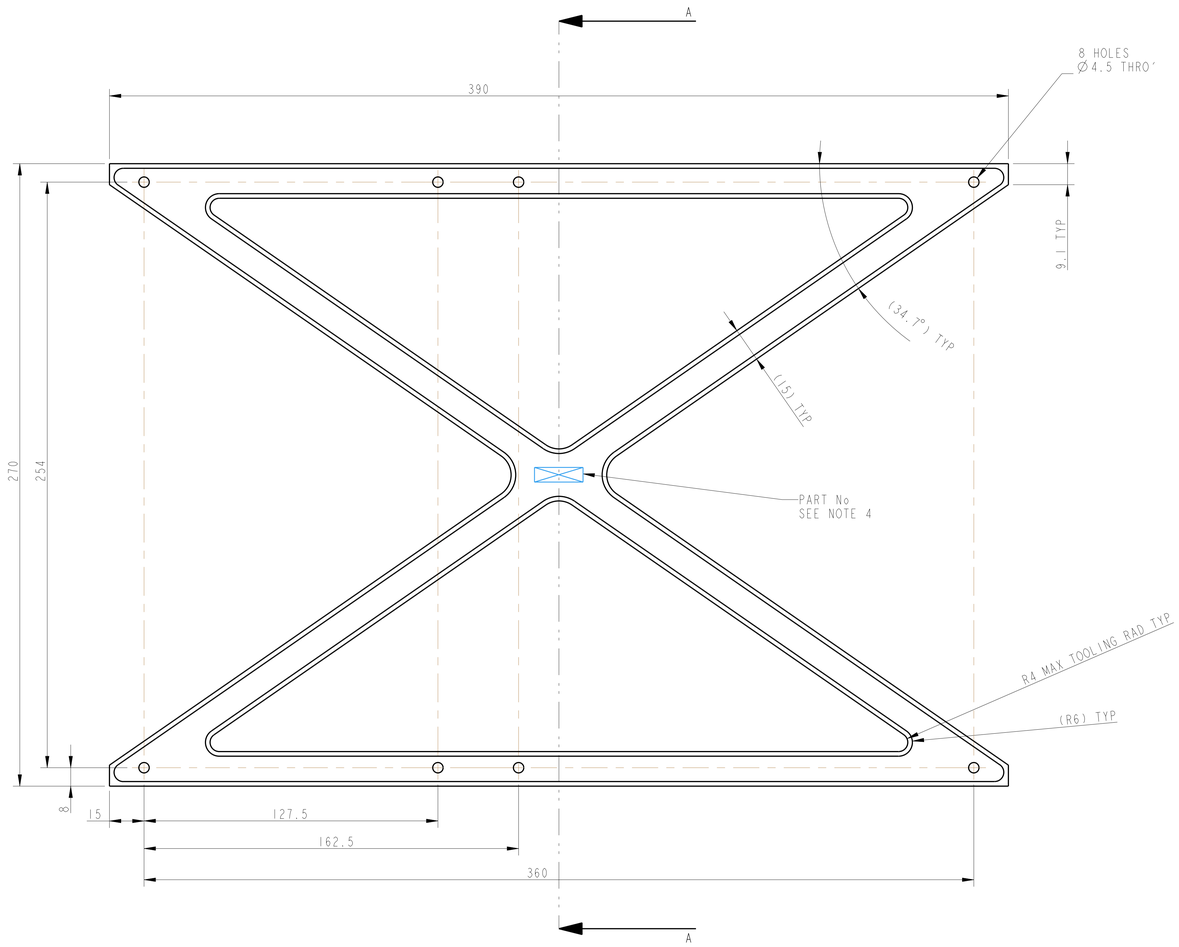


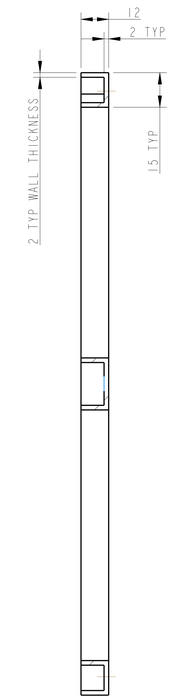


SECTION A-A

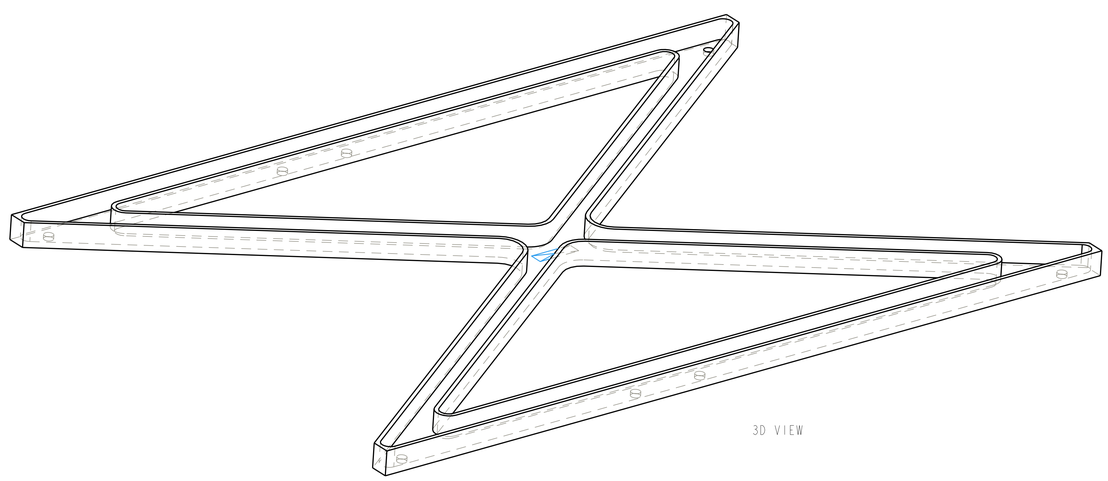

3D VIEW

NOTES: (UNLESS OTHERWISE SPECIFIED)

1. REMOVE ALL SHARP EDGES, 0.32 MIN.
2. DO NOT SCALE FROM DRAWING.
3. ALL MACHINING FLUIDS SHALL BE WATER SOLUBLE AND FREE OF SULFUR, CHLORINE AND SILICONE.
4. SERIAL NUMBER TO BE STAMPED ON SWITCH #10 (STAINLESS STEEL).
5. SCRIBE, ENGRAVE OR STAMP DRAWING PARTNUMBER ON NOTED SURFACE OF PART AND A THREE DIGIT SERIAL NUMBER, STARTING WITH 001 AT 001 FOR THE FIRST PART AND PROCEED CONSECUTIVELY. USE .37" HIGH CHARACTERS. EXAMPLE: D020188-001. A VIBRATORY TOOL MAY BE USED.

DIMENSIONS ARE IN mm [INCHES]
TOLERANCES:
X.XX ±0.2 mm [INCHES]
ANGULAR ±0.25°

MATERIAL: AL ALLOY 5083 OR SIMILAR

FINISH: CLEAN
m [µin] Ra = 1.6

| | NAME | DATE |
|---|---|---|
| DRAWN | J.O.DELL | 11/AUG/05 |
| CHECKED | MB | 15/MAR/13 |
| APPROVED | JOD | 15/MAR/13 |

LIGO — CALIFORNIA INSTITUTE OF TECHNOLOGY, MASSACHUSETTS INSTITUTE OF TECHNOLOGY, TGR, GLASGOW UNIVERSITY, GEO 600 GROUP, RUTHERFORD APPLETON LABORATORIES

SYSTEM: aLIGO

SUB-SYSTEM: SUS

NEXT ASSY: QUAD LOWER STRUCTURE

PART NAME: LOWER STRUCTURE X-BRACE
LOWER STRUCTURE

SIZE: E — DRG. NO. D060455 — REV: C

SCALE: (:) PROJECTION — SHEET 1 OF 1