REV.	DATE	DCN #	DRAWING TREE #
-	-	REFER TO E0900200-v1	-
-	-	-	-
-	-	-	-

NOTES CONTINUED:

⑤ SCRIBE, ENGRAVE, OR MECHANICALLY STAMP (NO INKS OR DYES) DRAWING PART NUMBER AND REVISION ON NOTED SURFACE FOLLOWED ON THE NEXT LINE BY A THREE DIGIT SERIAL NUMBER. SERIAL NUMBERS START AT 001 FOR THE FIRST ARTICLE AND PROCEED CONSECUTIVELY. USE .07" HIGH CHARACTERS. EXAMPLE: DXXXXXXX-VY, S/N 001. A VIBRATORY TOOL MAY BE USED.

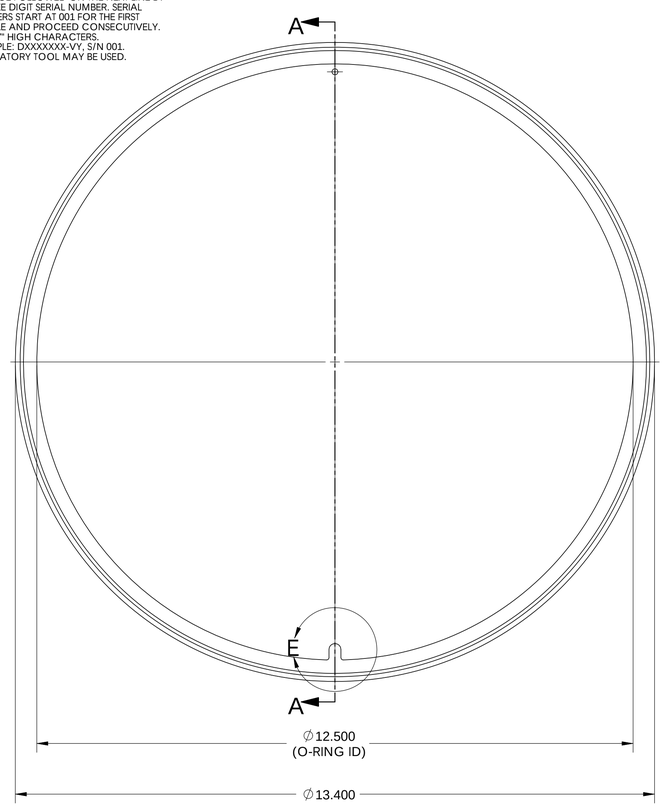

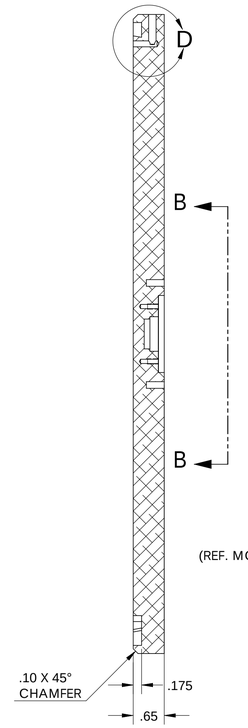

SECTION A-A
SCALE 1 : 1.5

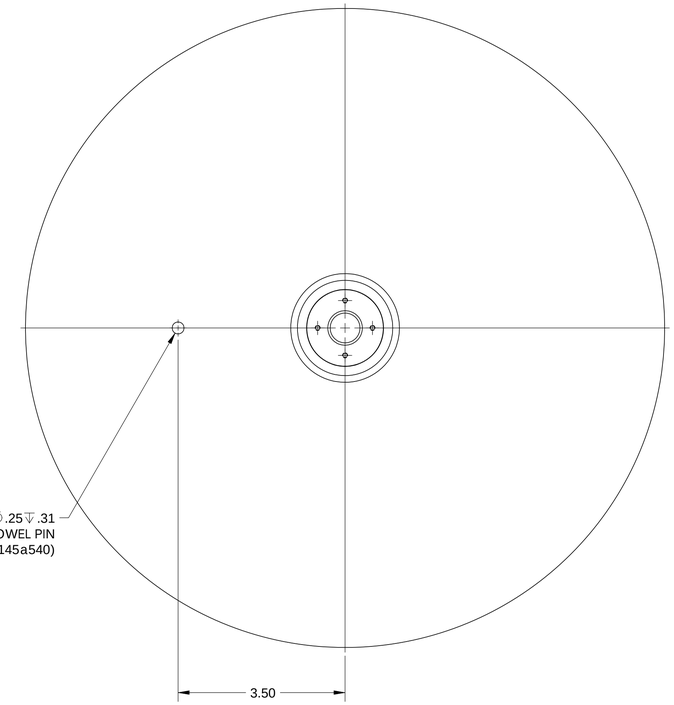

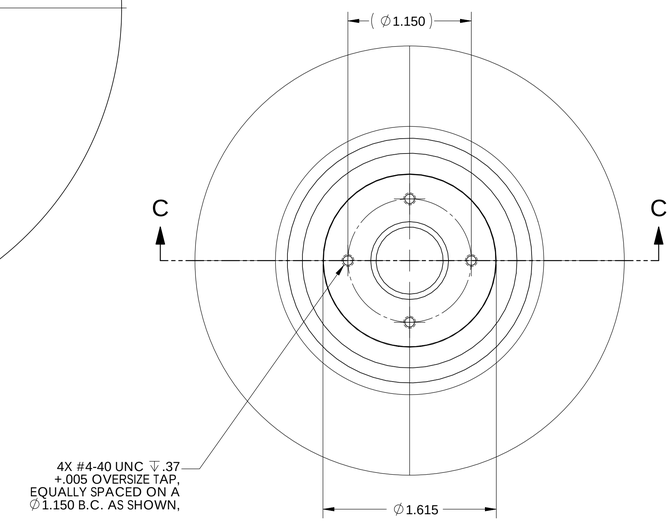

VIEW B-B
SCALE 1.5 : 1

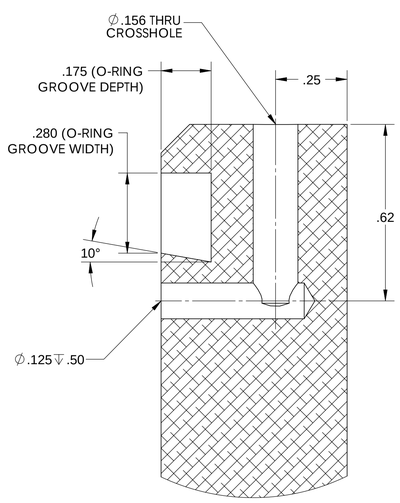

DETAIL D
SCALE 4 : 1

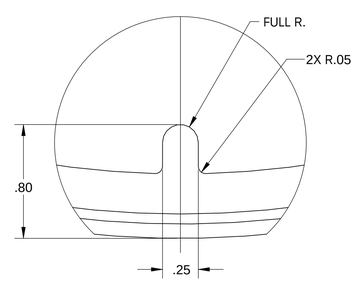

DETAIL E
SCALE 2 : 1

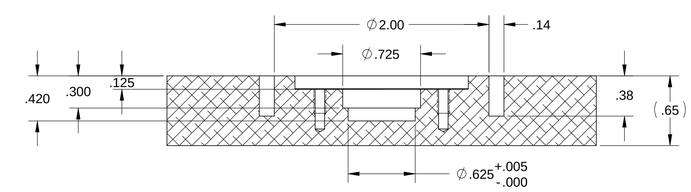

SECTION C-C
SCALE 1.5 : 1

NOTES AND TOLERANCES: (UNLESS OTHERWISE SPECIFIED)

DIMENSIONS ARE IN INCHES

TOLERANCES:
.XX ± 0.01
.XXX ± 0.005

ANGULAR ± 0.5°

1. INTERPRET DRAWING PER ASME Y14.5-1994.
2. REMOVE ALL SHARP EDGES, R.02 MIN.
3. DO NOT SCALE FROM DRAWING.
4. ALL MACHINING FLUIDS SHALL BE WATER SOLUBLE AND FREE OF SULFUR, CHLORINE AND SILICONE, SUCH AS CINCINNATI MILACRON'S CIMTECH 410.

MATERIAL: 6061-T6 Alum
FINISH: 32 µinch

LIGO — CALIFORNIA INSTITUTE OF TECHNOLOGY / MASSACHUSETTS INSTITUTE OF TECHNOLOGY

SYSTEM: ADVANCED LIGO
SUB-SYSTEM: COC
NEXT ASSY: CP Optic Container

PART NAME: Wedge Plate, CP Optic Container

DESIGNER	ED CHAVEZ	2 JUN 2009	SIZE: D	DWG. NO.: D0901329
DRAFTER	ED CHAVEZ	14 JUL 2009		REV.: v1
CHECKER	REFER TO E0900200-v1			
APPROVAL	REFER TO E0900200-v1		SCALE: 1:2	PROJECTION:

SHEET 1 OF 1

D0901329 Plate, Fitting, Mirror Wedge, Alum Box Rnd, CP, PART PDM REV: X-000, DRAWING PDM REV: X-001