PR3

INSTALL CONFIGURATIONS (i.e.:IN CHAMBER - DOORS CLOSED)

REV.	DATE	DCN #	DRAWING TREE #
V1	10 AUG 2011	-	-
v11	18 SEP 2017	E1700274-x0	-
-	-	-	-

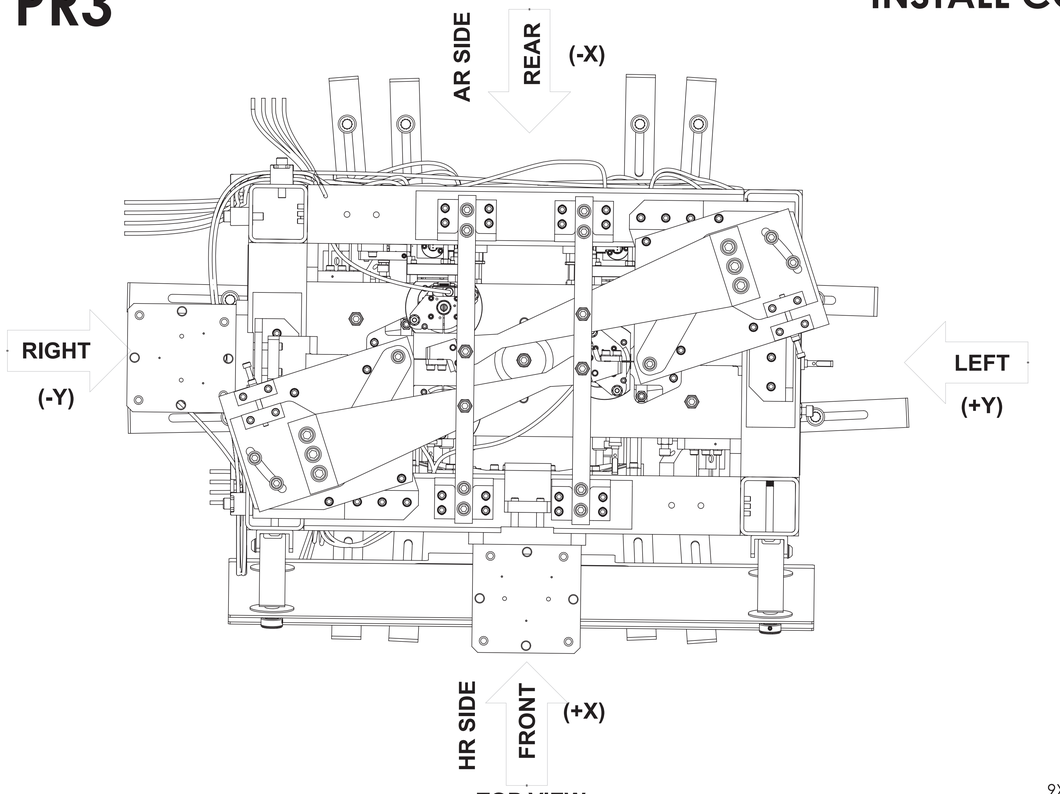

TOP VIEW
(SEE SHEET 3, FOR DOG CLAP DETAILS)

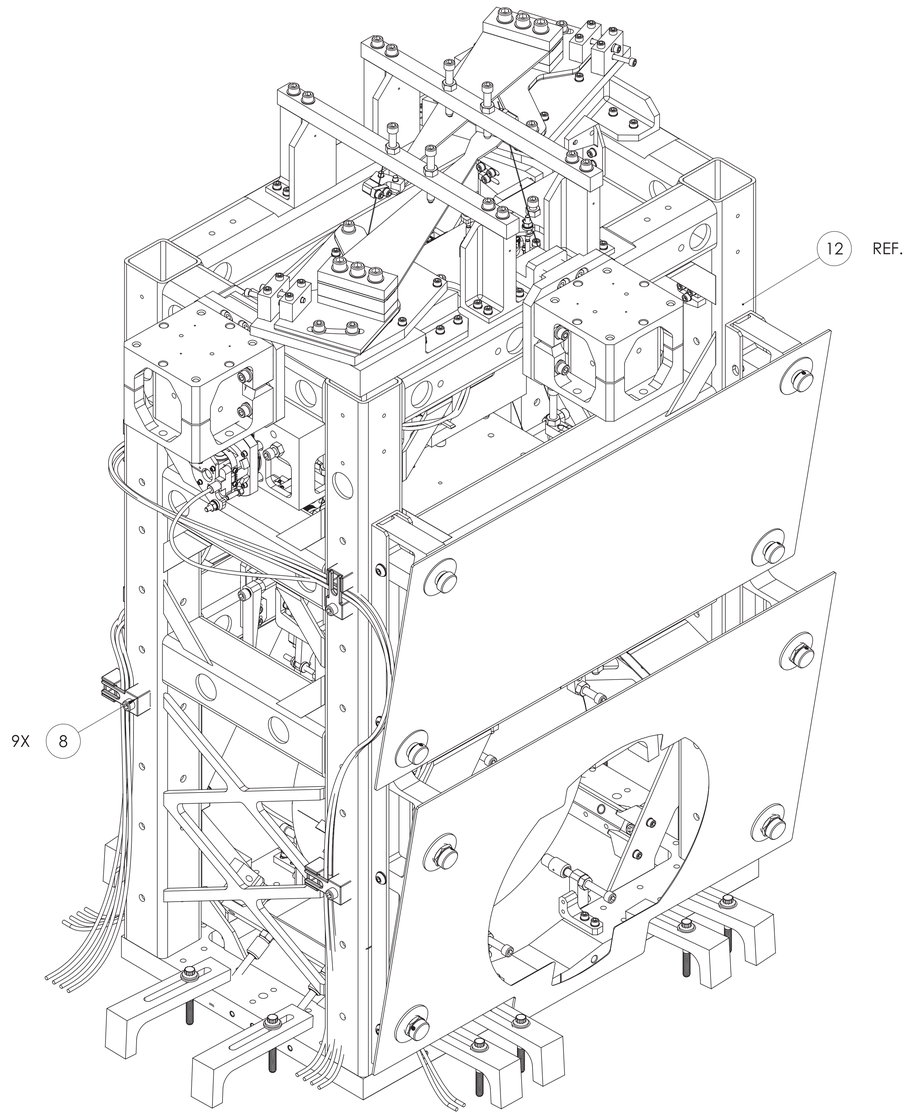

1. REFERENCED DOCUMENTATION:
   1.1 LIGO-E1100109, HAM SUS CONTROLS ARRANGEMENT.
   1.2 LIGO-D1101493, OSEM ORIENTATION.
   1.3 LIGO-D1101463, SYSTEM CABLING DIAGRAM.
   1.4 LIGO-D1002424, VIBRATION ABSORBER ORIENTATION.
   1.5 LIGO-E1100411, CABLE CLAMP TORQUE.
   1.6 LIGO-D1101296, HAM ISI HOLE TAB.

2. SEE SHEETS 4,5,6,7,AND 8 FOR CABLE ROUTE DETAILS.

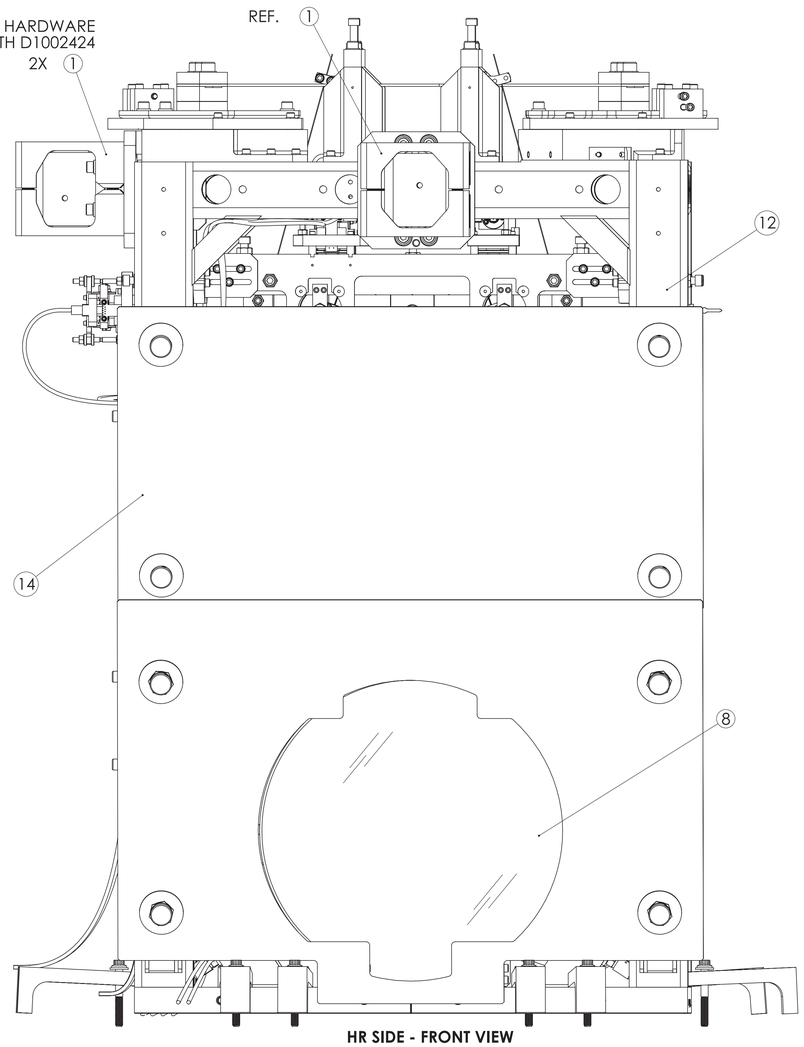

HR SIDE - FRONT VIEW

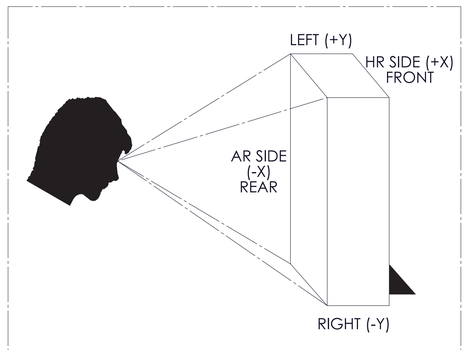

STRUCTURE ORIENTATION: NAMED VIEWS

LOCAL COORDINATES - REFERENCE

Xmm	Ymm	Zmm	YAW°
381.5	-177.4	-94.5	180.65°

REFER TO DRAWING D1101233 FOR HAM2-L1 INSTALLATION PLATE LAYOUT

TABLE 1: HAM2-L1 PR3 CABLING SPECIFICATIONS, FROM/TO DES.

ROUTE NO.	FROM OSEM POSITION	TO CB FLOOR DES.	QP LEG DES.	CABLE PART NO.	NOM. CABLE LENGTH (IN)
1	M3-UL (S)	CB-1 (SECOND)	A	D1000234	78
	M3-LL (N)		B		
	M3-UR (N)		C		
	M3-LR (S)		D		
2	M2-UL (S)	CB-1 (FIRST)	A	D1000234	60
	M2-LL (N)		B		
	M2-UR (N)		C		
	M2-LR (S)		D		
3	M1-T3 (N)	CB-2 (FIRST)	A	D1000234	66
	M1-LF (N)		B		
	M1-RT (S)		C		
	M1-SD (S)		D		
4	M1-T1 (S)	CB-2 (SECOND)	C	D1000234	78
	M1-T2 (S)		D		

NOTE : ROUTE NO. 4 IS A SHARED CABLE, SEE D0900415 FOR QP LEGS 'A' AND 'B' ROUTING

ITEM NO.	PART NUMBER	DESCRIPTION	QTY.
14	D1700239	aLIGO, SLic, HLTS BAFFLE ASSY.	1
13	N-2520-A UC COMPONENTS OR EQ.	HEX NUT 1/4-20, Ag PLATED	1
12	D070447	HLTS OVERALL ASSEMBLY	1
11	MS15795-810 OR EQ.	WASHER, FLAT, 1/4	A/R
10	92196A555 OR EQ. McMASTER-CARR	SCREW, SHC, 1/4-20 X 3.25 LG.	A/R
9	2AL2.00-12SL	1/4-20 X 2.00 12PT BOLT	12
8	D1101372	PR3 L1 OPTICS ASSEMBLY	1
7	D0902462	CLAMP ASSY., UHV COMPATIBLE	9
6	D1100785-620	WASHER, FLAT, .38 X .620 O.D.	12
5	D1001376-03	AdvLIGO HAM Optics Table Dog Clamp 1.1L	3
4	D1001376-02	AdvLIGO HAM Optics Table Dog Clamp 1.1M	8
3	D1001376-01	AdvLIGO HAM Optics Table Dog Clamp 1.1S	1
2	D1000158	L1 H1 PR3 INSTALLATION PLATE	1
1	D1002424	VIBRATION ABSORBER ASSEMBLY	2

PARTS LIST

NOTES AND TOLERANCES: (UNLESS OTHERWISE SPECIFIED)

MATERIAL: --
FINISH: -- µinch

LIGO CALIFORNIA INSTITUTE OF TECHNOLOGY MASSACHUSETTS INSTITUTE OF TECHNOLOGY

SYSTEM: ADVANCED LIGO
SUB-SYSTEM: SUS
NEXT ASSY: D0900365

PART NAME: AdvLIGO SUS HAM2-L1, XYZ Local CS for HLTS (PR3)

DESIGNER			
DRAFTER	K. BUCKLAND	10 AUG 2011	
CHECKER	SEE DCC	SEE DCC	
APPROVAL	SEE DCC	SEE DCC	

SIZE: E
DWG. NO.: D0900368
REV.: v11
SCALE: 1:2
PROJECTION:
SHEET 1 OF 9

D0900368 AdvLIGO SUS HAM2-L1, XYZ Local CS for HLTS, PART FDW REV: X-13, DRAWING FDW REV: X-017

PR3

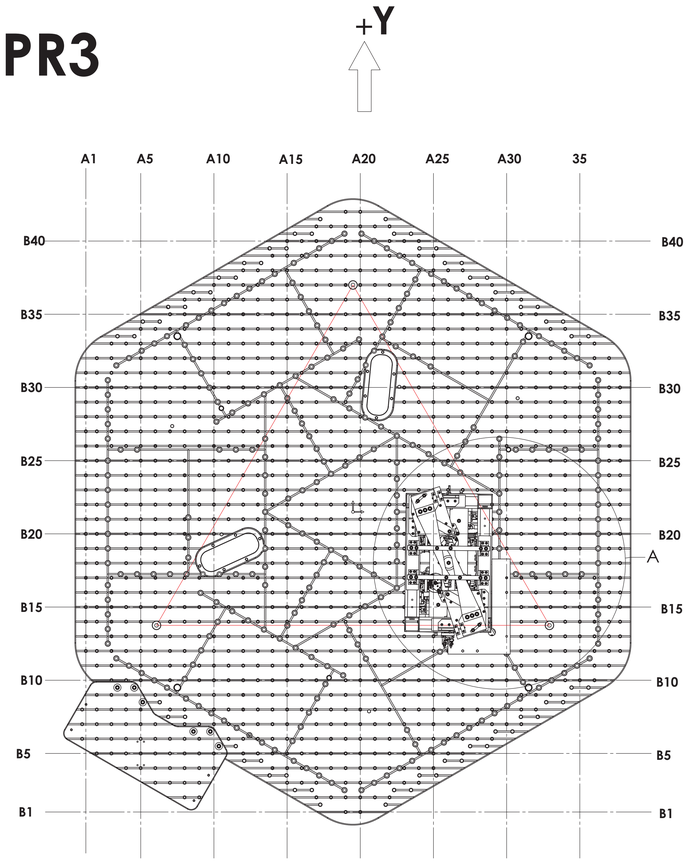

TOP VIEW (1.6)

REF. TRIANGLE: SEE D1000125 FOR
ISI NAMING AND ORIENATION CONVENTION

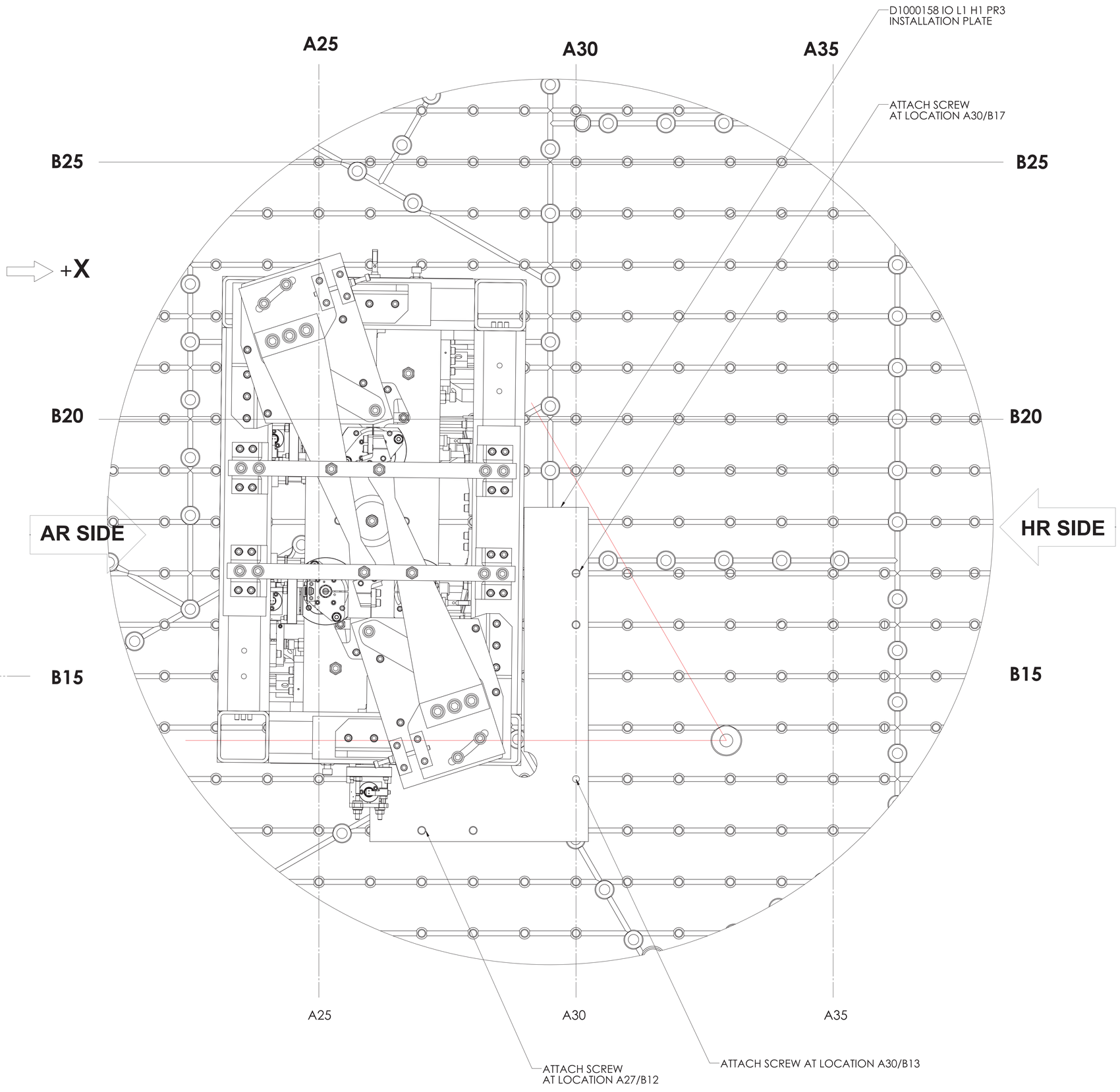

DETAIL A
SCALE 1 : 1.5

TOP VIEW SHOWING INSTALLATION PLATE LOCATION (1.6)

OPTICAL TABLE SHOWN FOR STRUCTURE LOCATION AND ORIENTATION ONLY.
DOG CLAMPS, VIBRATION ABSORBERS AND HARDWARE REMOVED FOR CLARITY

ALIGNMENT PLATE INSTALLATION / LOCATION

LIGO CALIFORNIA INSTITUTE OF TECHNOLOGY
MASSACHUSETTS INSTITUTE OF TECHNOLOGY

SIZE	DWG. NO.	REV.
E	D0900368	v11

SCALE: 1:8 PROJECTION: SHEET 2 OF 9

D0900368-A4v4DGD SOLSWA2011, NT2 Unicode CS for HLTS, PART PDM REV. X-1.03, DRAWING PDM REV. X-0.17

PR3

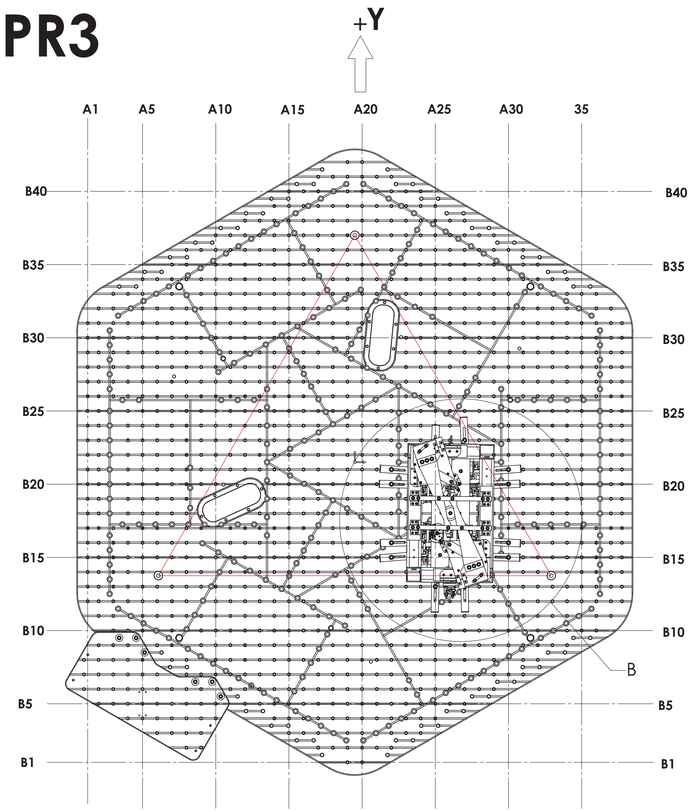

TOP VIEW (1.6)

REF. TRIANGLE: SEE D1000125 FOR
ISI NAMING AND ORIENATION CONVENTION

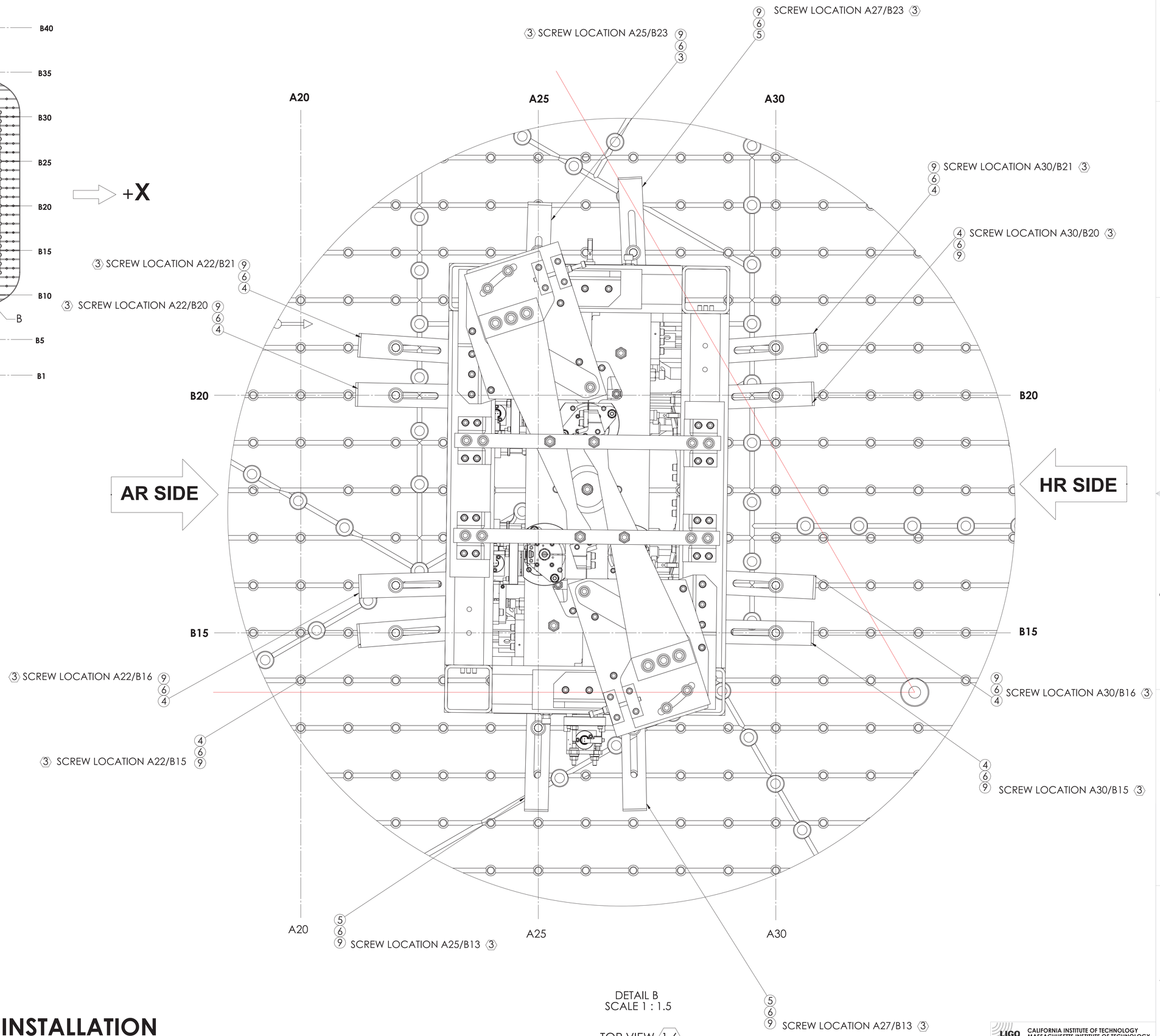

DETAIL B
SCALE 1 : 1.5

TOP VIEW (1.6)

OPTICAL TABLE SHOWN FOR STRUCTURE AND DOG CLAMP LOCATIONS AND ORIENTATION

DOG CLAMPS IDENTIFICATION / INSTALLATION

(3) TORQUE TO 100 IN LBS (USE STANDARD 12 PT SOCKET)

LIGO CALIFORNIA INSTITUTE OF TECHNOLOGY
MASSACHUSETTS INSTITUTE OF TECHNOLOGY

SIZE	DWG. NO.	REV.
E	D0900368	v11

SCALE: 1:8 PROJECTION: SHEET 3 OF 9

SEE SHEET 1, TABLE 1; FOR CABLING SPECIFICATIONS.

PR3

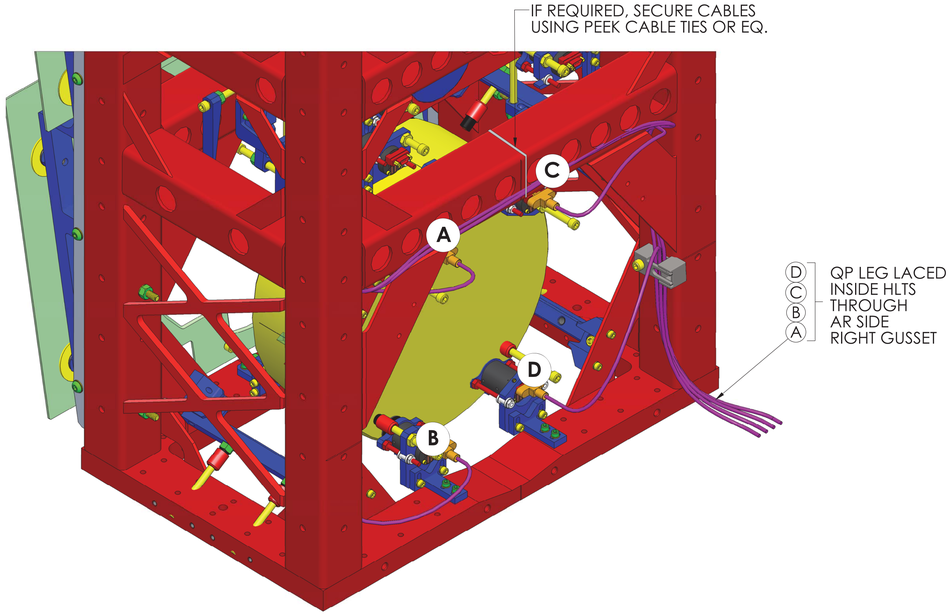

AR SIDE (1.5)
ISO VIEW- REAR LEFT (-X)

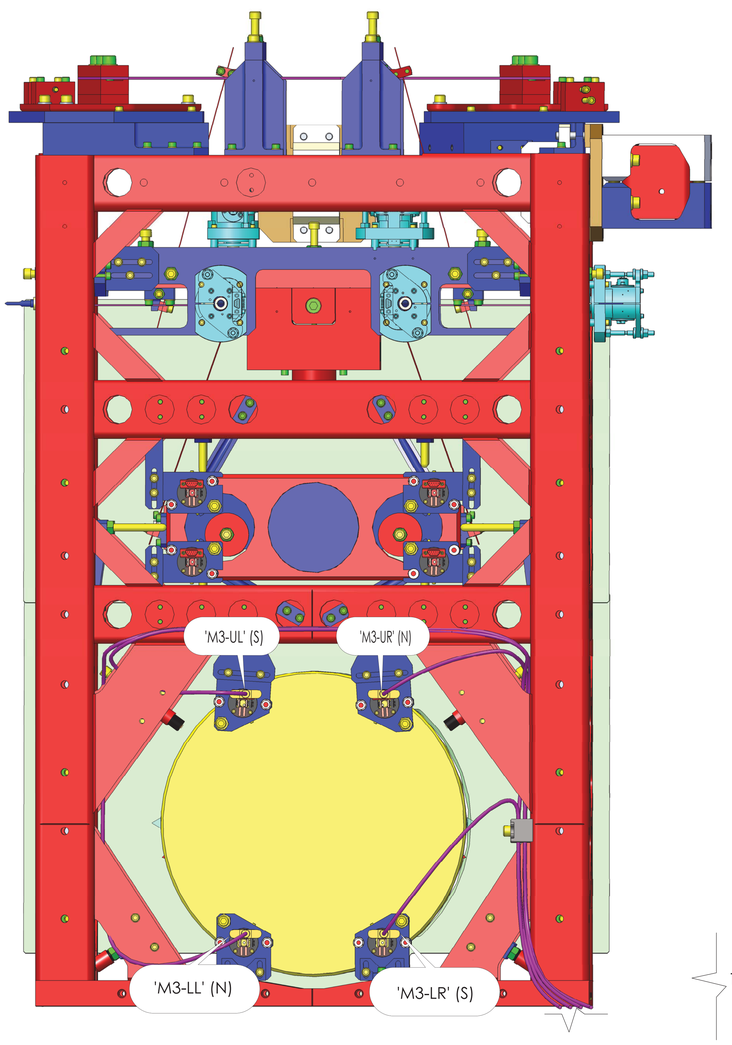

AR SIDE - REAR (-X)
(END CONNECTORS, NOT SHOWN FOR CLARITY)

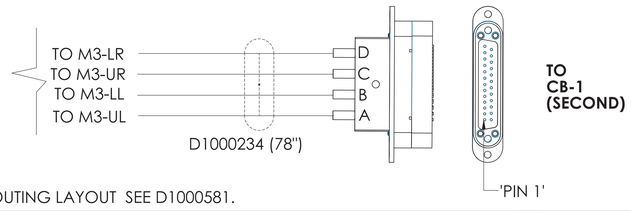

(4) DO NOT CLAMP CABLES TIGHTLY. PROVIDE SUFFICIENT SPACE FOR THE CABLES TO RUN FREELY BETWEEN CLAMP JAWS.

(5) SHORTING MAY OCCUR IN QP BOSEM & AOSEM TEFLON CABLES CLAMPED EXCESSIVELY TIGHT. THEREFORE, THE PEEK CLAMPS (i.e. 'CLP-1' AND CABLE TIES) SHOULD SERVE ONLY AS A GUIDE FOR THE CABLES TO REACH THEIR DESTINATION , AND SHOULD NOT CLAMP THE CABLES IN PLACE.

(6) TORQUE TO APPROXIMATELY 20 IN/LBS.

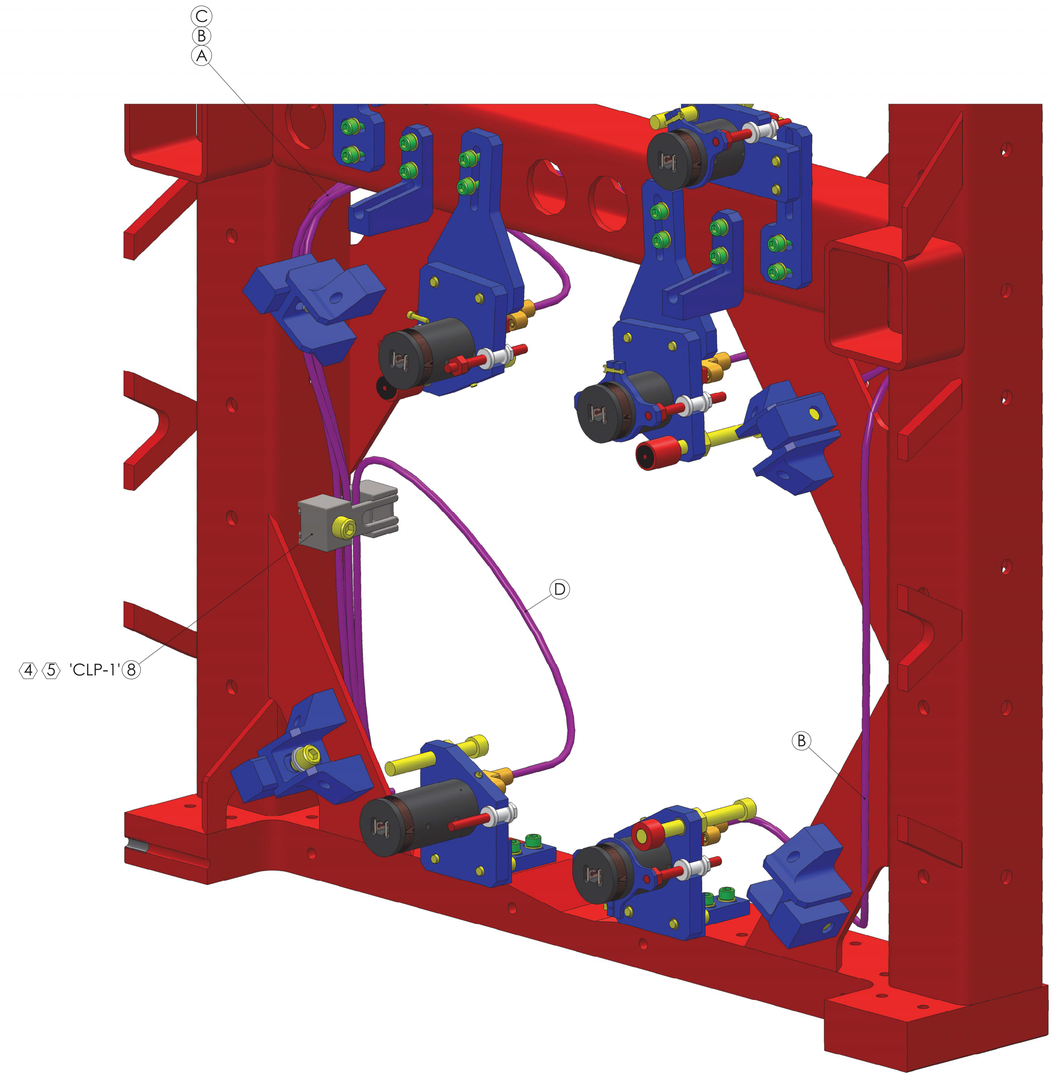

ISO VIEW - FRONT LEFT
BROKEN OUT SECTION
(AS VIEWED FROM INSIDE)

ROUTE NO. 1

SEE DCC FILE CARD D0900368
FOR STEP BY STEP CABLING GUIDE

FOR SYSTEM CABLING DIAGRAM, CABLE BRACKET LOCATION/ORIENTATION WRT CHAMBER, & ROUTING LAYOUT SEE D1000581.

LIGO CALIFORNIA INSTITUTE OF TECHNOLOGY
MASSACHUSETTS INSTITUTE OF TECHNOLOGY

SIZE	DWG. NO.	REV.
E	D0900368	v11

SCALE: 1:8 PROJECTION: SHEET 4 OF 9

D0900368 AdvLIGO SUS TMA02.1, XYZ Local CS for HLTS PART PDM REV: X-133, DRAWING PDM REV: X-017

SEE SHEET 1, TABLE 1; FOR CABLING SPECIFICATIONS.

IF REQUIRED, SECURE CABLES USING PEEK CABLE TIES OR EQ.

FOR SYSTEM CABLING DIAGRAM, CABLE BRACKET LOCATION/ORIENTATION WRT CHAMBER, & ROUTING LAYOUT SEE D1000581.

PR3

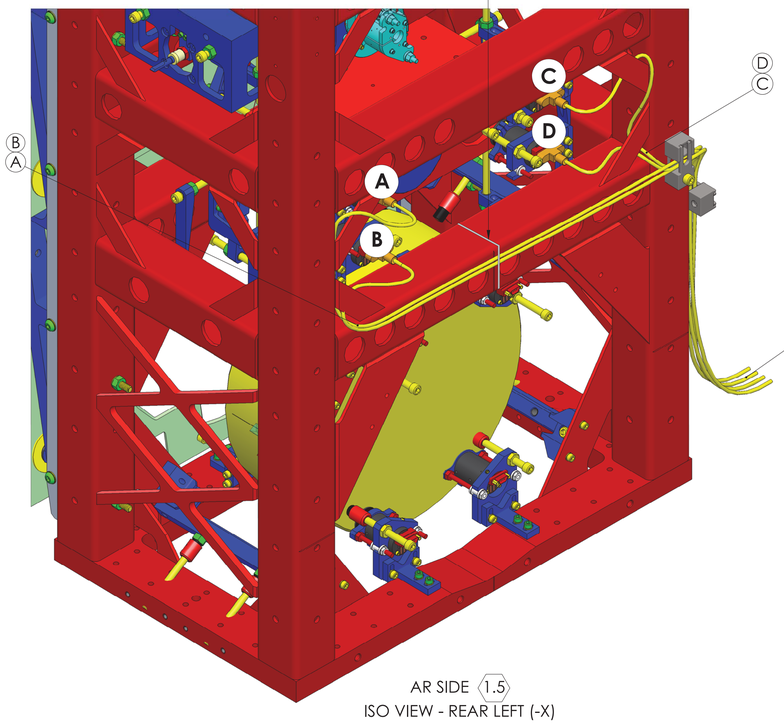

AR SIDE 1.5
ISO VIEW - REAR LEFT (-X)

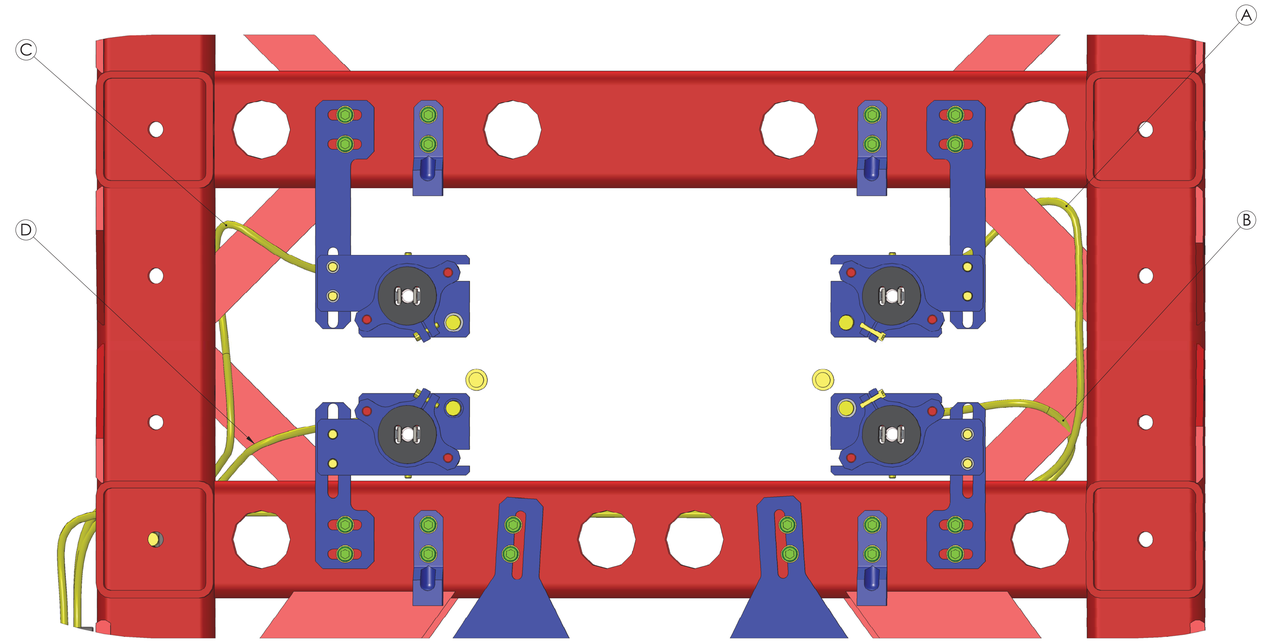

HR SIDE - FRONT (+X)
BROKEN OUOT SECTION VIEW
(AS VIEWED FROM INSIDE)

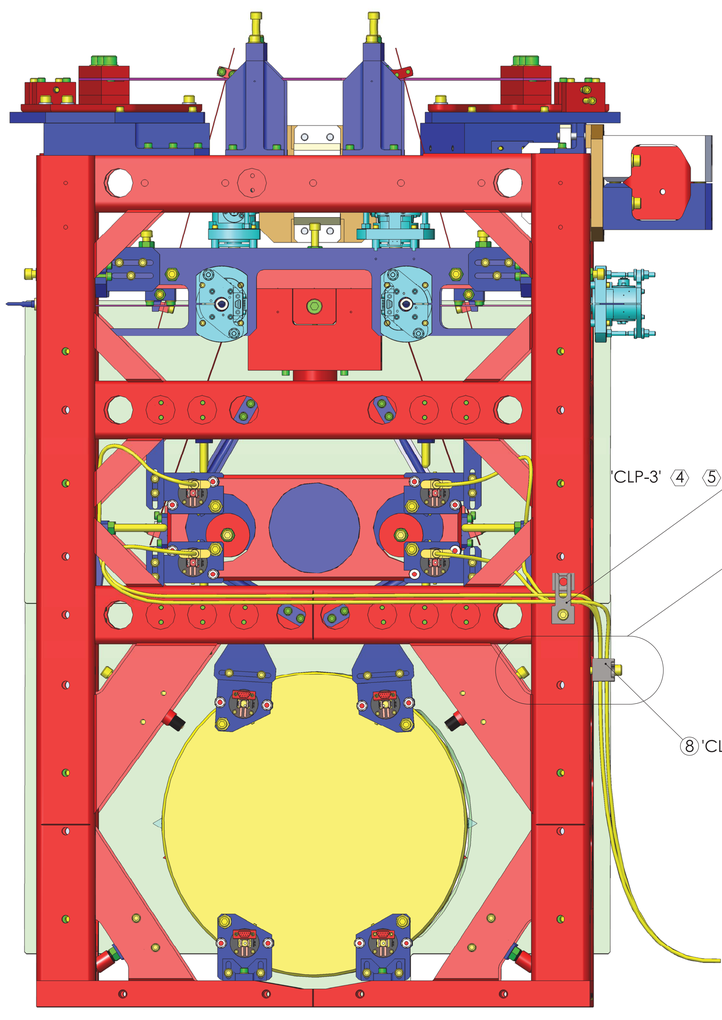

AR SIDE - REAR (-X) 1.1 1.2

(END CONNECTORS, NOT SHOWN FOR CLARITY)

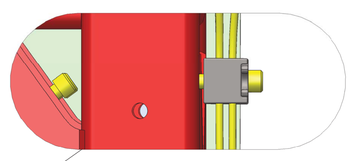

DETAIL C
CABLE CLAMP MT. (STANDARD)
SCALE 1 : 1

OR

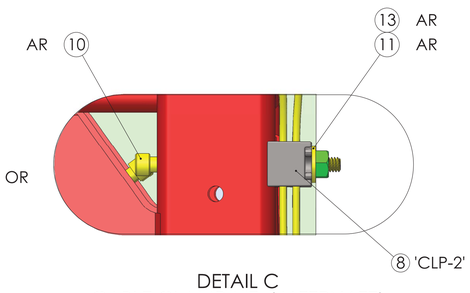

DETAIL C
CABLE CLAMP MT. (ALTERNATE)
SCALE 1 : 1

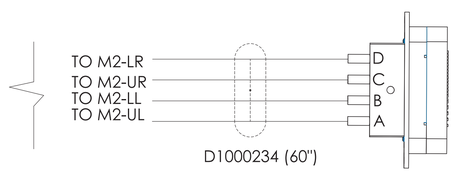

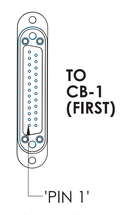

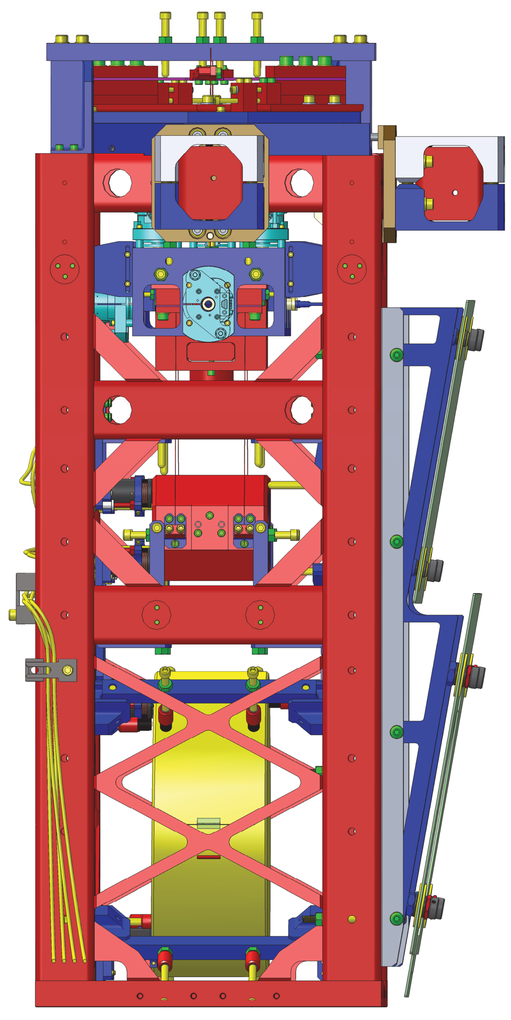

RIGHT SIDE (-Y)

ROUTE NO. 2

SEE DCC FILE CARD D0900368
FOR STEP BY STEP CABLING GUIDE

LIGO CALIFORNIA INSTITUTE OF TECHNOLOGY
MASSACHUSETTS INSTITUTE OF TECHNOLOGY

SIZE	DWG. NO.	REV.
E	D0900368	v11

SCALE: 1:8 PROJECTION: SHEET 5 OF 9

D0900368 AdvLIGO SUS TMA/R2-L1, XFE Local CS for HLTS PART PDM REV: X-133, DRAWING PDM REV: X-017

SEE SHEET 1, TABLE 1; FOR CABLING SPECIFICATIONS.

FOR SYSTEM CABLING DIAGRAM, CABLE BRACKET LOCATION/ORIENTATION WRT CHAMBER, & ROUTING LAYOUT SEE D1000581.

PR3

ISO VIEW REAR - LEFT

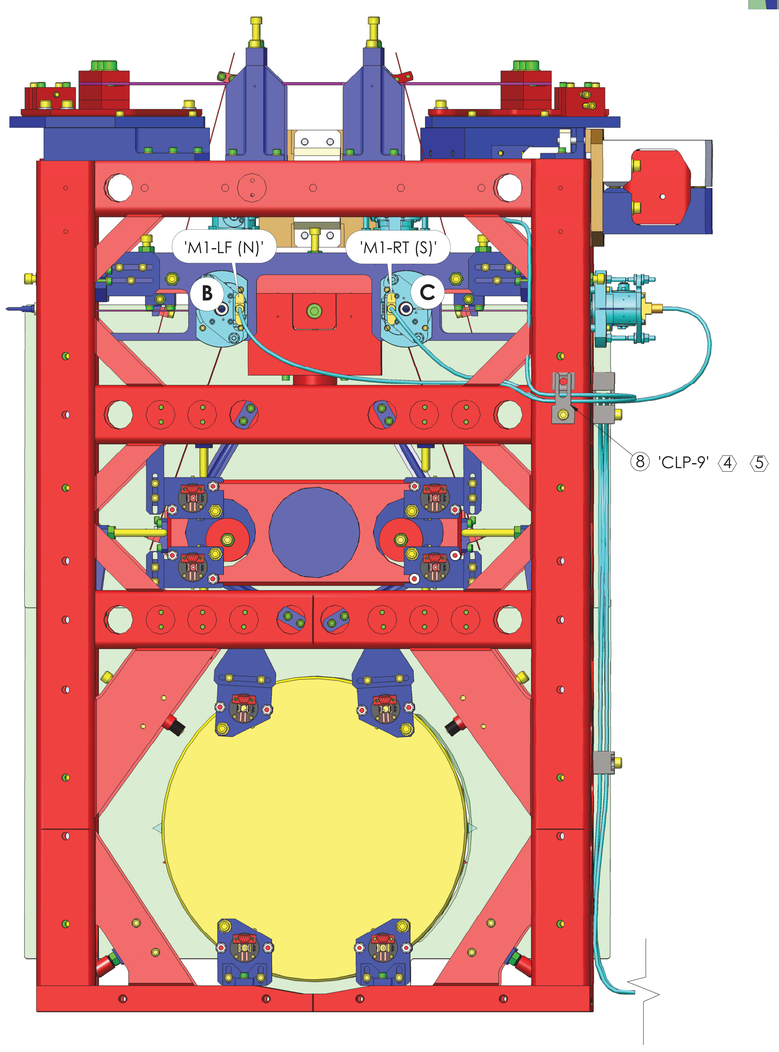

AR SIDE - REAR (-X) 1.1 1.2
(END CONNECTORS, NOT SHOWN FOR CLARITY)

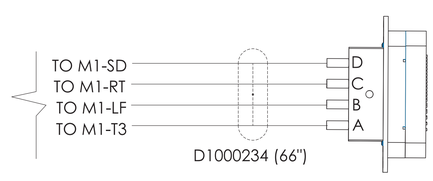

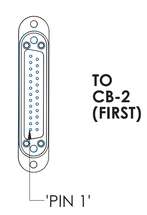

ROUTE NO. 3

SEE DCC FILE CARD D0900368
FOR STEP BY STEP CABLING GUIDE

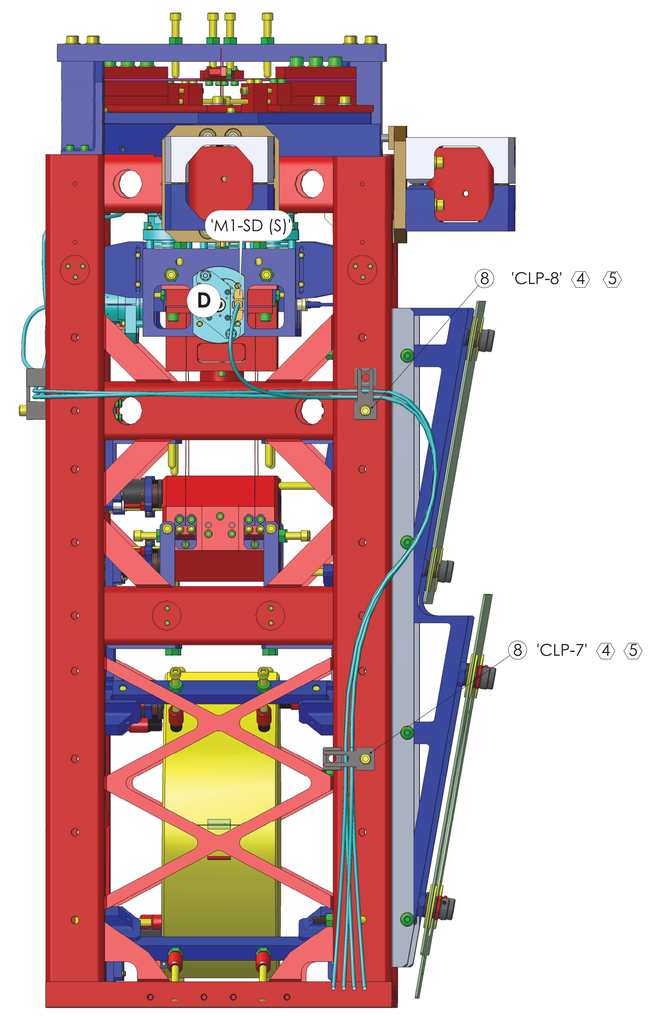

RIGHT SIDE (-Y)

LIGO CALIFORNIA INSTITUTE OF TECHNOLOGY MASSACHUSETTS INSTITUTE OF TECHNOLOGY

SIZE	DWG. NO.	REV.
E	D0900368	v11

SCALE: 1:8 PROJECTION: SHEET 6 OF 9

D0900368-A(AUTO SIZE MAX)-L, XYZ Loc:(X C5 to H13), PART FOM REV: X-33, DRAWING FOM REV: X-017

SEE SHEET 1, TABLE 1; FOR CABLING SPECIFICATIONS.

FOR SYSTEM CABLING DIAGRAM, CABLE BRACKET LOCATION/ORIENTATION WRT CHAMBER, & ROUTING LAYOUT SEE D1000581.

PR3

(SHARED)

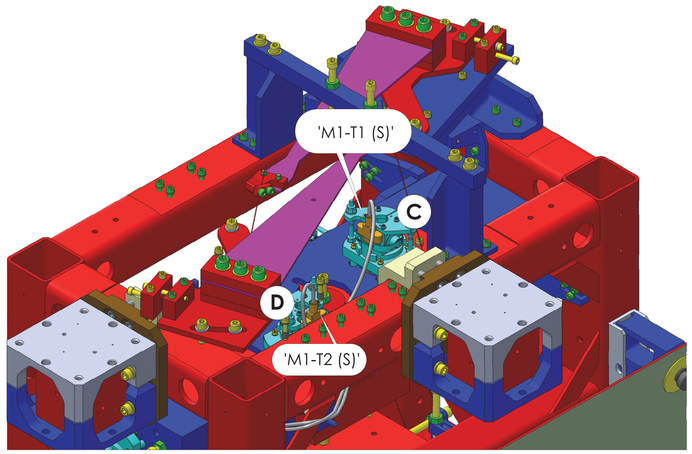

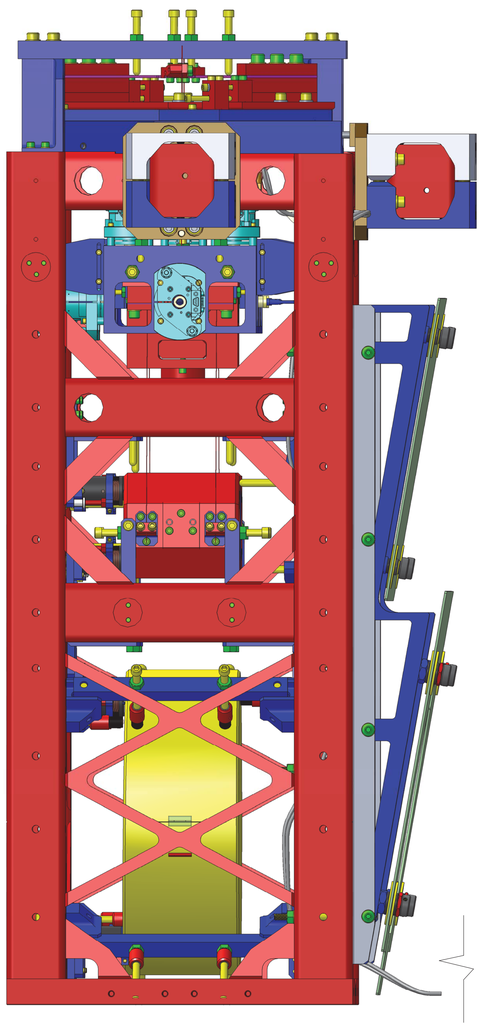

RIGHT SIDE (-Y)

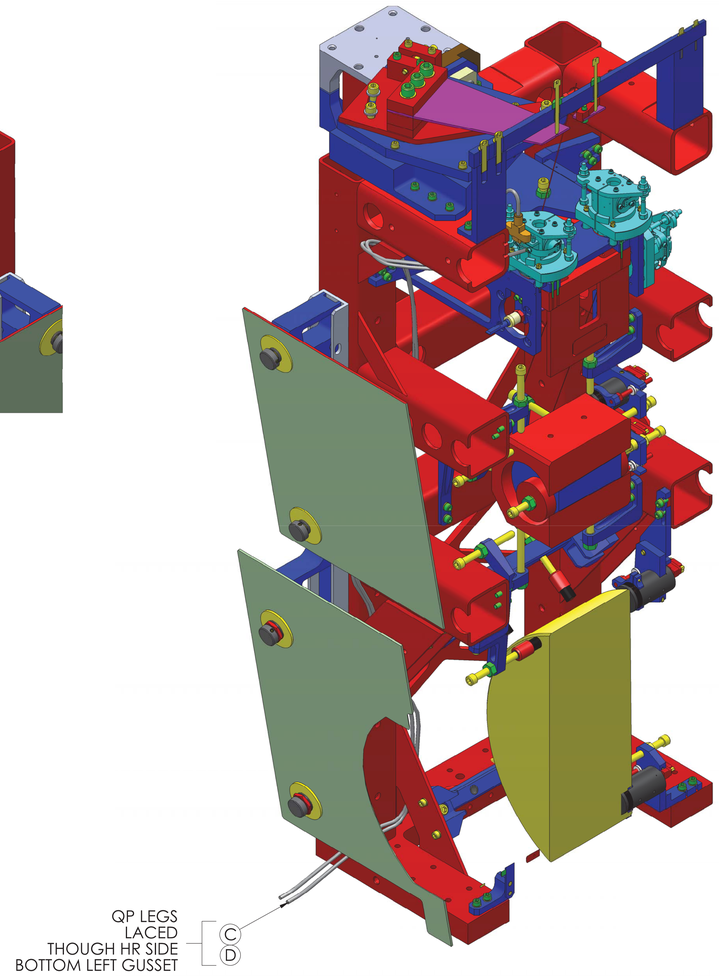

ISO VIEW FRONT - RIGHT
BROKEN OUT SECTION
(AS VIEWED FROM THE INSIDE)

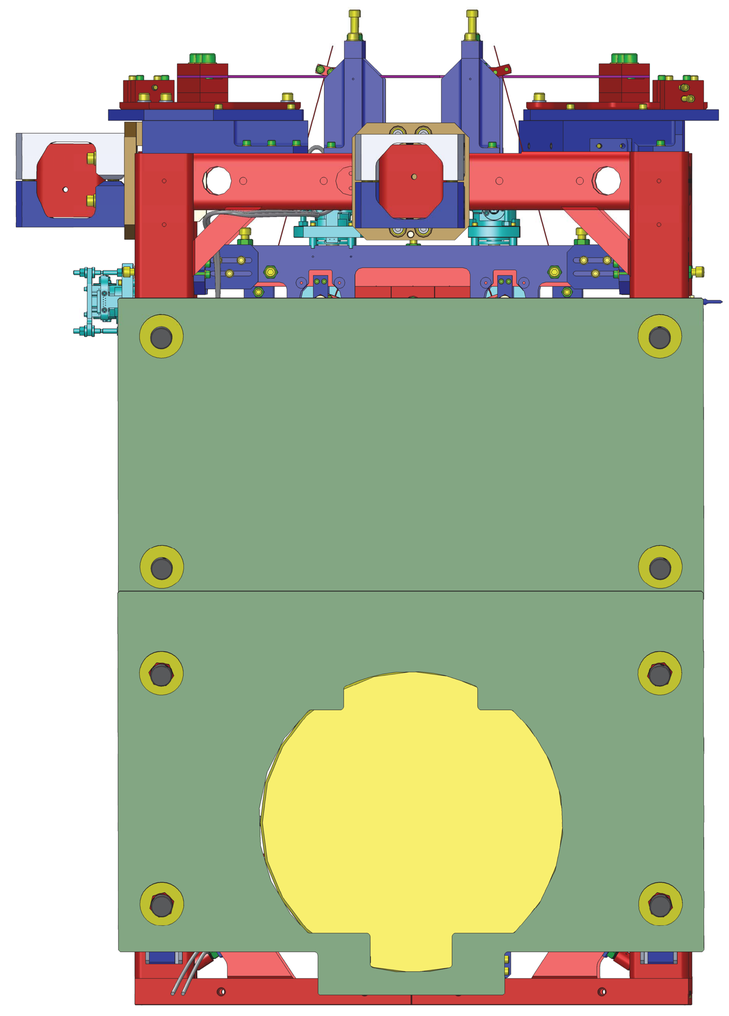

HR SIDE - FRONT (+X)
(END CONNECTORS, NOT SHOWN FOR CLARITY)

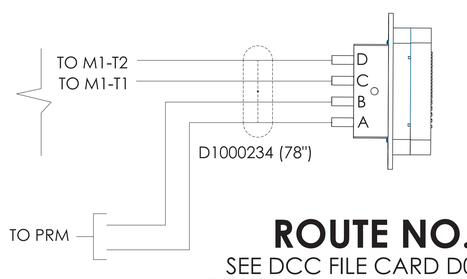

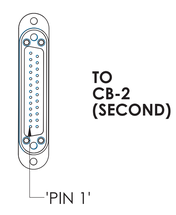

ROUTE NO. 4

SEE DCC FILE CARD D0900368
FOR STEP BY STEP CABLING GUIDE

LIGO CALIFORNIA INSTITUTE OF TECHNOLOGY
MASSACHUSETTS INSTITUTE OF TECHNOLOGY

SIZE	DWG. NO.	REV.
E	D0900368	v11

SCALE: 1:8 PROJECTION: SHEET 7 OF 9

D0900368 AdvLIGO SUS MAM2-L1 XYZ Local CS for HLTS PART FDM REV: X-1.33; DRAWING FDM REV: X-0.17

SEE SHEET 1, TABLE 1; FOR CABLING SPECIFICATIONS.

⟨7⟩ INDICATED ITEMS FOR TRANSPORTATION PURPOSES ONLY. AND ARE NOT PART OF FINISHED ASSEMBLY. SEE D1101674 FOR REFERENCE.

⟨8⟩ REMOVE VIBRATION ABSORVER FACE TO AVOID INTERFERENCE WITH LIFT BRACKET.

PR3

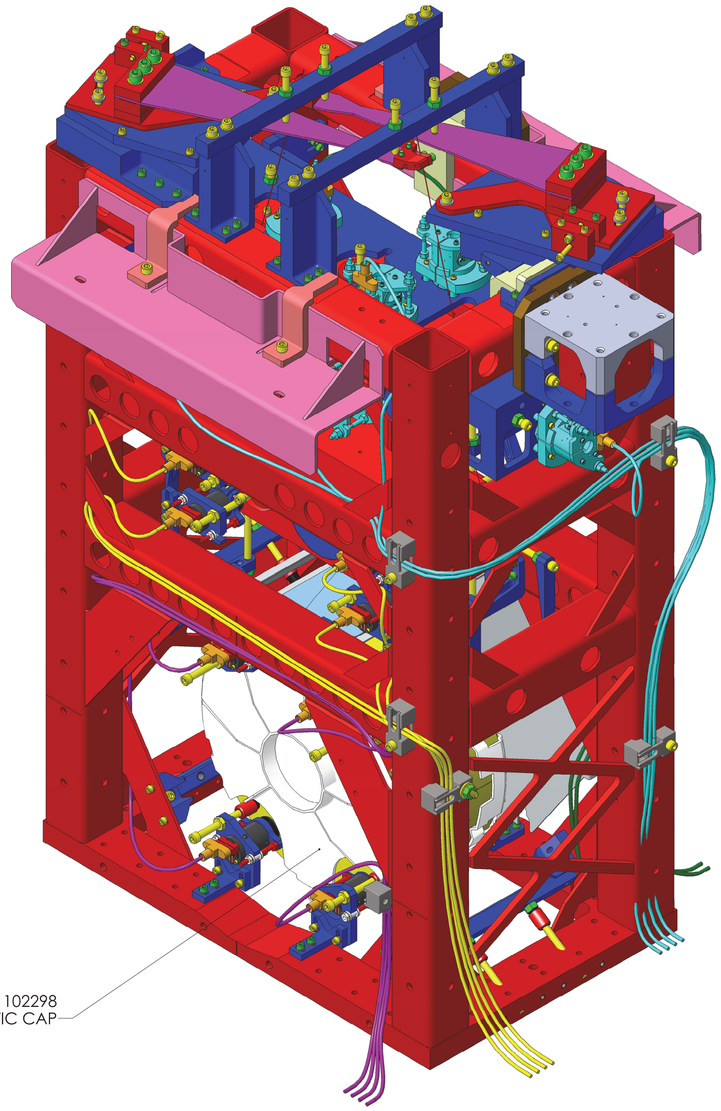

AR SIDE
ISO VIEW, REAR - RIGHT (-X)

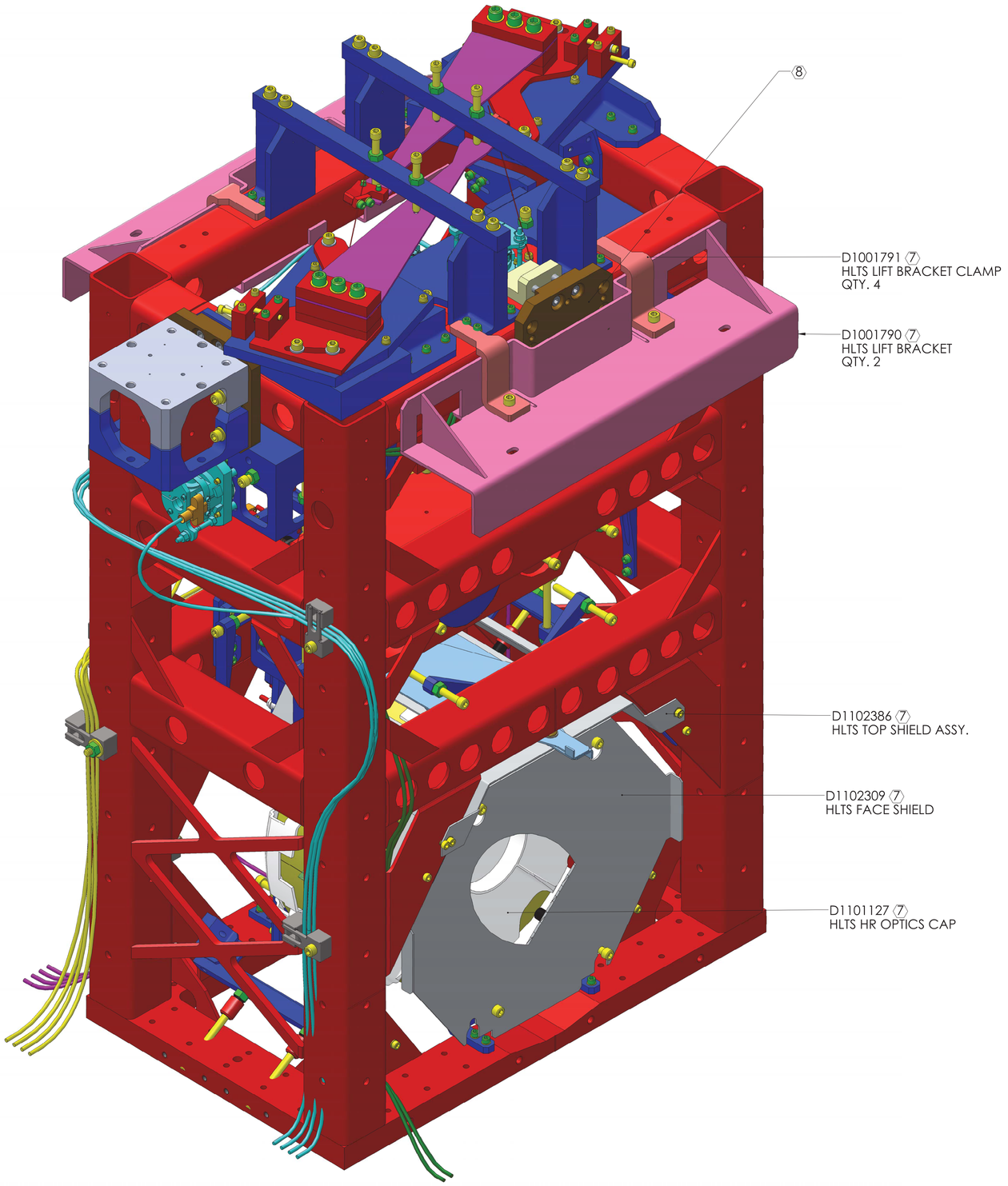

HR SIDE
ISO VIEW, FRONT - RIGHT (+X)

HLTS STRUCTURE TRANSP.

VIBRATION ABSORBERS FACE: NOT SHOWN
(REMOVED FOR TRANSP. PURPOSES)

LIGO CALIFORNIA INSTITUTE OF TECHNOLOGY
MASSACHUSETTS INSTITUTE OF TECHNOLOGY

SIZE	DWG. NO.	REV.
E	D0900368	v11

SCALE: 1:8 PROJECTION: SHEET 8 OF 9

PR3

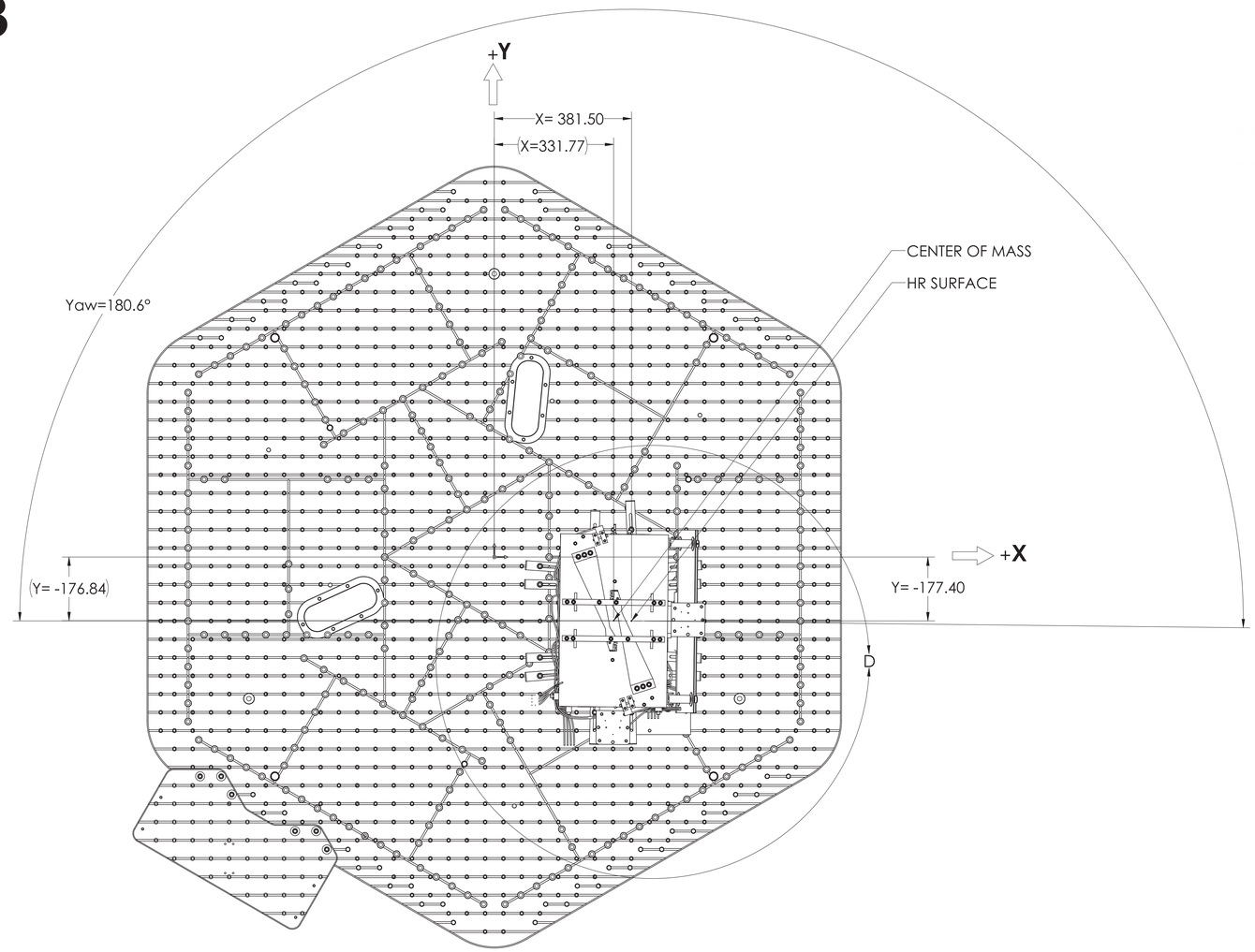

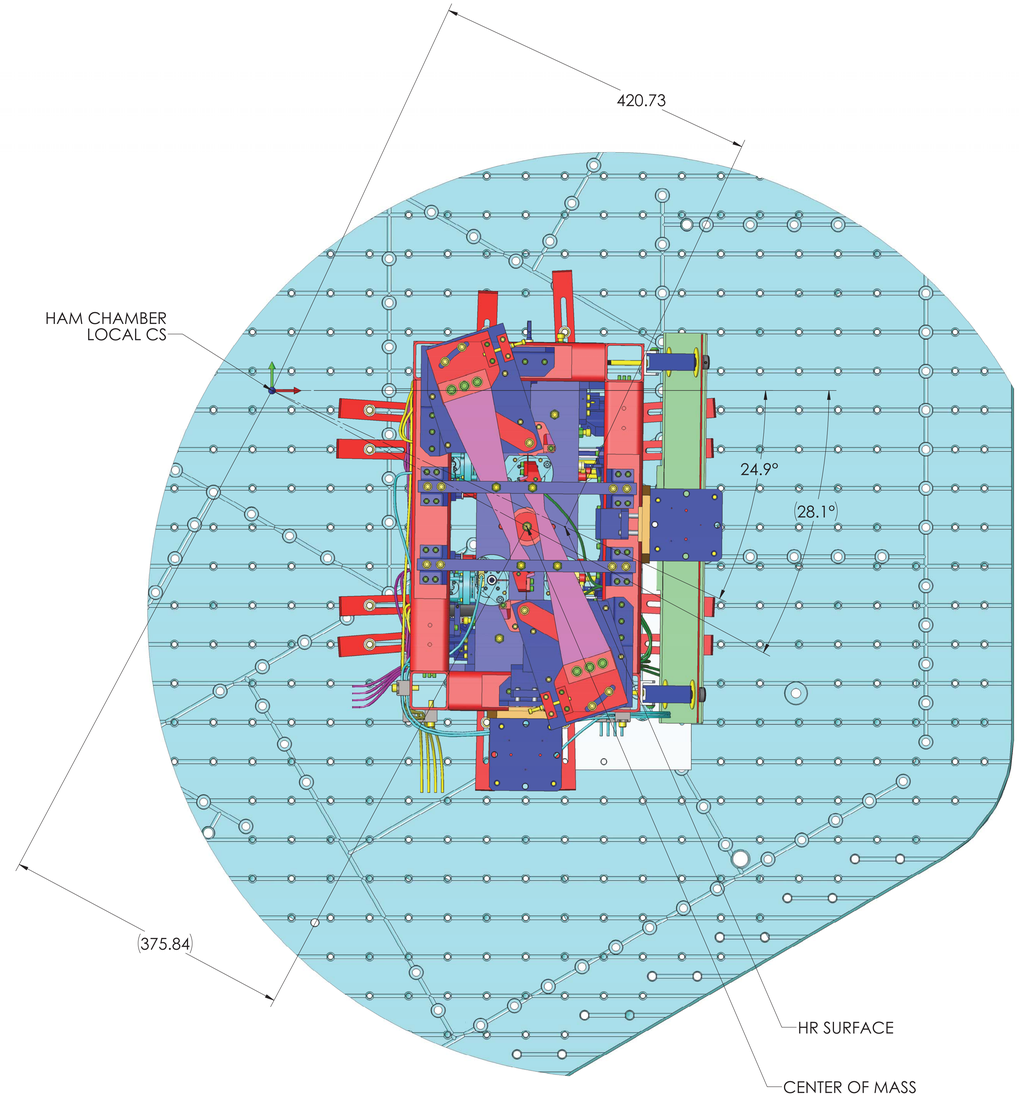

DETAIL D
SCALE 1 : 3

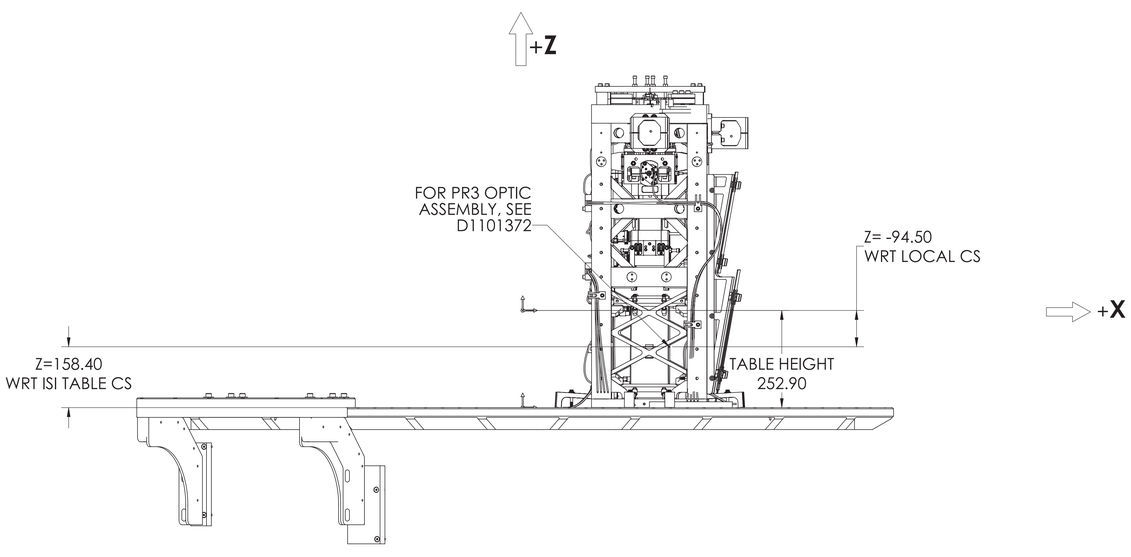

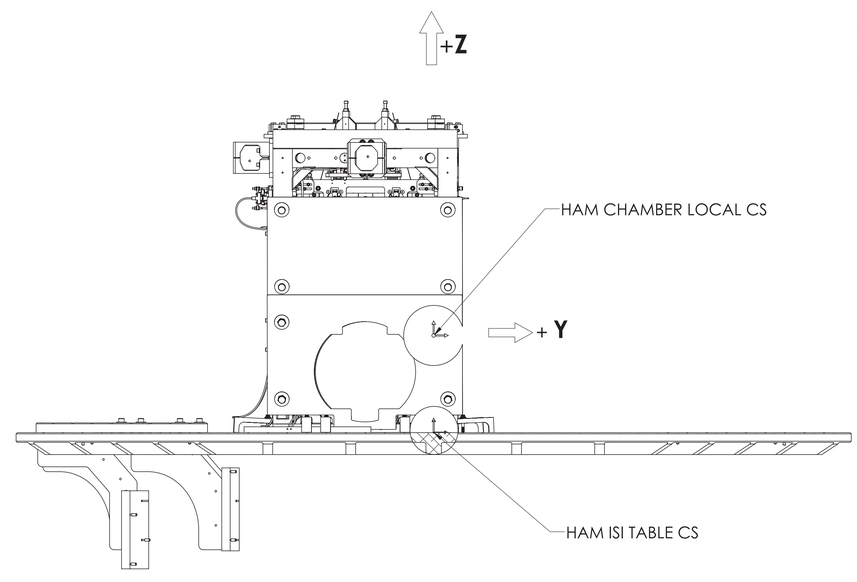

LOCAL COORDINATES DEFINITIONS

NOTE: DIMENSION IN PARENTHESIS (REFERENCE DIMENSIONS), ARE FROM CENTER OF MASS.

LIGO CALIFORNIA INSTITUTE OF TECHNOLOGY
MASSACHUSETTS INSTITUTE OF TECHNOLOGY

SIZE	DWG. NO.	REV.
E	D0900368	v11

SCALE: 1:8 PROJECTION: SHEET 9 OF 9