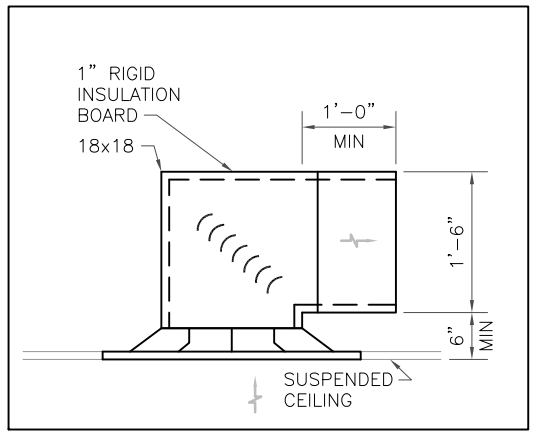

1 / – RETURN ENCLOSURE
SCALE:NONE

GENERAL NOTES

1. PROVIDE MECHANICAL WORK IN ACCORDANCE WITH THE LATEST EDITION OF THE IBC, UPC, IMC, AND SMACNA STANDARDS.
2. COORDINATE SUPPLY AIR DIFFUSERS AND RETURN/EXHAUST AIR GRILLE LOCATIONS WITH ARCHITECTURAL DRAWINGS. COORDINATE DUCT ROUTING WITH LIGHT FIXTURE LOCATIONS.
3. MECHANICAL WORK SHOWN IS DIAGRAMMATIC. PROVIDE OFFSETS, TRANSITIONS, AND OTHER DUCTWORK AND ASSOCIATED CONSTRUCTION WHERE REQUIRED TO AVOID BUILDING STRUCTURAL ELEMENTS OR THE WORK OF OTHER TRADES.
4. DUCTWORK DIMENSIONS SHOWN ARE NET INSIDE DIMENSIONS. ENLARGE DUCT DIMENSIONS AS REQUIRED FOR INTERNALLY LINED DUCTWORK.
5. TEMPERATURE SENSOR SHALL BE LOCATED WHERE SHOWN 48 INCHES ABOVE FINISHED FLOOR.
6. PROVIDE ACCESS PANELS FOR ALL MECHANICAL EQUIPMENT, BALANCING DAMPERS OR VALVES ENCLOSED IN PERMANENT CONSTRUCTION OR DUCTWORK.
7. INSTALL DUCTWORK TO MAINTAIN SERVICE CLEARANCES, ACCESS DOOR CLEARANCES AND COIL PULL CLEARANCES AT ALL EQUIPMENT.
8. ALL PENETRATIONS AND SLEEVES THRU FLOORS/ WALLS SHALL BE SEALED WEATHERTIGHT.
9. TRANSITION DUCTWORK TO FULL SIZE OF AHU.
10. INSTALL OPPOSED BLADE BALANCING DAMPERS WITH LOCKING QUADRANT WHERE INDICATED.

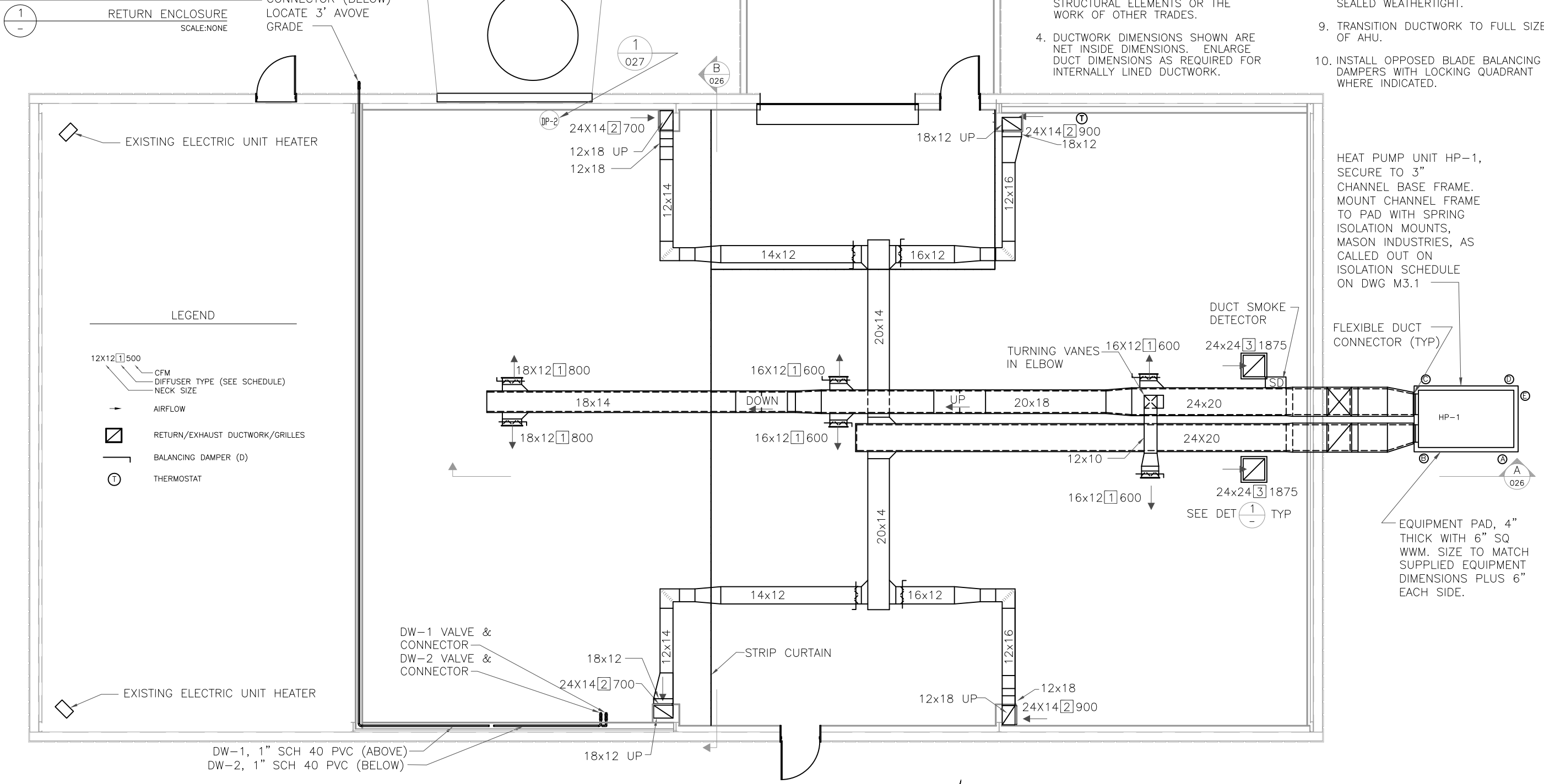

HVAC PLAN
SCALE: 1/4" = 1'-0

REV NO.	DATE	BY	DESCRIPTION	DATE OF ISSUE	APPROVED
				12/16/2008	

GILBERT L. HIBBS, STATE OF WASHINGTON, 25649, REGISTERED PROFESSIONAL ENGINEER
EXPIRES 10/31/09

© 2008 Hibbs Engineering, Inc.

DRAWN BY: GLH
CHECKED BY:
DESIGN A/E
DESIGN QM
HED APPROVAL

LHO WAREHOUSE
MECHANICAL
HVAC PLAN, SECTION

PROJECT NUMBER: 1023.010
CAD FILE: 0000A01.DWG

LIGO HANFORD OBSERVATORY
DRAWING: LIGO–D0810025–V1

HIBBS ENGINEERING, INC.
KENNEWICK, WASHINGTON

DRAWING NUMBER 025
REV V1

PRINTED BY: Gilbert Hibbs Office on 12/17/2008 5:12 PM