REV.	DATE	DCN #	DRAWING TREE #
v1	10 FEB 2009	-	-
v5	08 OCT 2021	E2100433-x0	-
-	-	-	-

NOTES CONTINUED:

(5) SCRIBE, ENGRAVE (A VIBRATORY TOOL MAY BE USED), LASER MARK OR MECHANICALLY STAMP (NO INKS OR DYES) DRAWING PART NUMBER, REVISION (AND VARIANT OR "TYPE" IF APPLICABLE) ON NOTED SURFACE OF PART FOLLOWED ON THE NEXT LINE WITH A THREE DIGIT SERIAL NUMBER. SERIAL NUMBERS START AT 001 FOR THE FIRST ARTICLE AND PROCEED CONSECUTIVELY. USE MINIMUM 0.12" HIGH CHARACTERS, UNLESS THE SIZE OF THE PART DICTATES SMALLER CHARACTERS. EXAMPLE: DXXXXXXX-VY, TYPE-XX, S/N XXX

6. ALL PARTS SHALL BE MANUFACTURED IN ACCORDANCE WITH LIGO SPECIFICATION E0900364

7. ALL MATERIAL IS TO BE VIRGIN MATERIAL (i.e. NO WELD REPAIRS, PLUGS OR RECYCLED MATERIAL). NO REPAIRS SHALL BE MADE UNLESS APPROVED IN ADVANCE, AND IN WRITING, BY LIGO LABORATORY. REFER TO LIGO E0900364

8. SURFACE FINISH TO BE AS-PROCESSED FROM MILL/SUPPLIER, FREE FROM SCRATCHES OR GOUGES.

9. BASE UNIT (1) HAS HAMILTON PART NUMBER D070012-A

(10) INDICATED HOLE PATTERNS TO BE ADDED AFTER BASE UNIT IS CONSTRUCTED.

(11) INSTALL FARSIDE PRIOR TO FORMING.

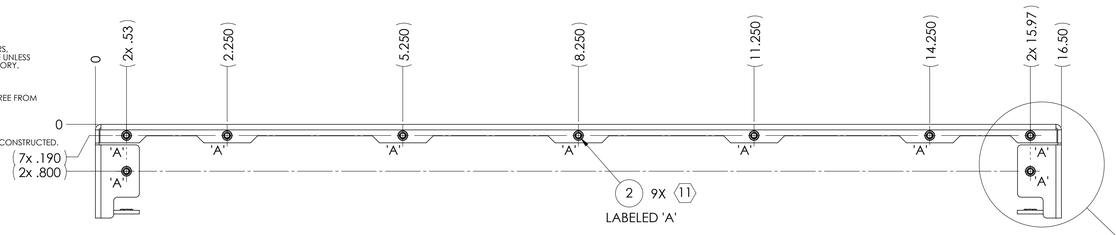

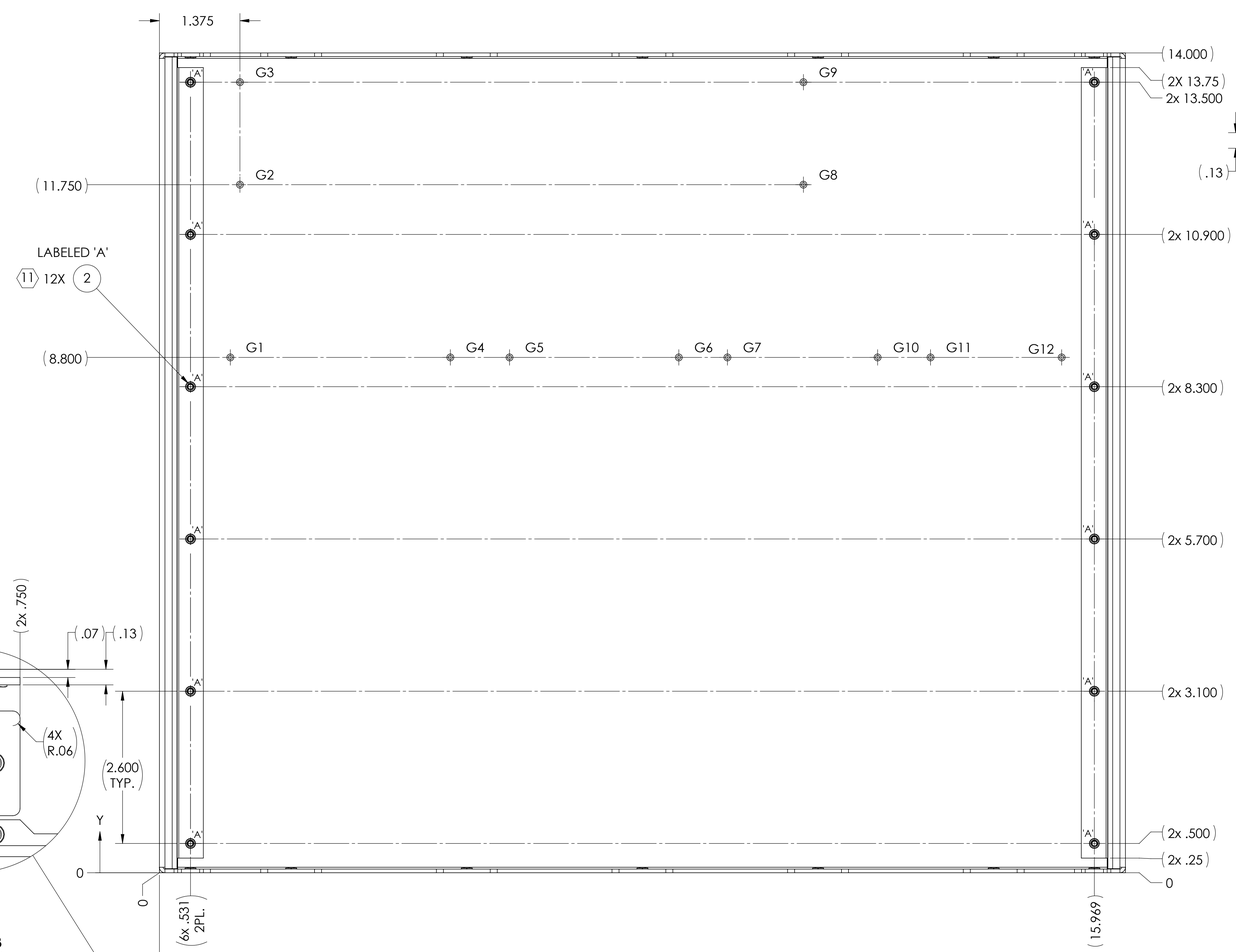

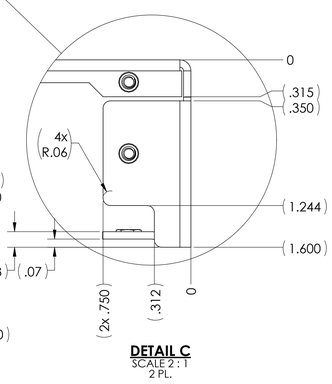

DETAIL C
SCALE 2 : 1
2 PL.

TAG	X LOC	Y LOC	SIZE
G1	1.211	8.800	∅ .07 THRU ⌵ ∅ .12 X 100°
G2	1.375	11.750	
G3	1.375	13.500	
G4	4.969	8.800	
G5	5.980	8.800	
G6	8.871	8.800	
G7	9.702	8.800	
G8	11.000	11.750	
G9	11.000	13.500	
G10	12.267	8.800	
G11	13.171	8.800	
G12	15.411	8.800	
A	AS NOTED	AS NOTED	∅.172 THRU
B	AS NOTED	AS NOTED	∅.189 THRU

(10)

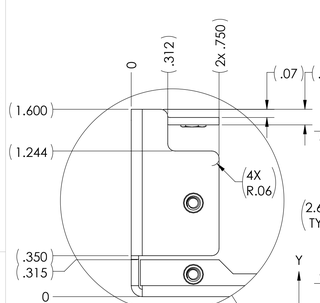

DETAIL B
SCALE 2 : 1
2 PL.

DETAIL A
SCALE 2 : 1
2 PL.

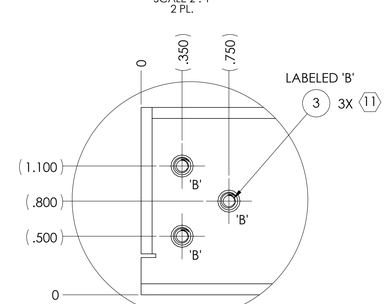

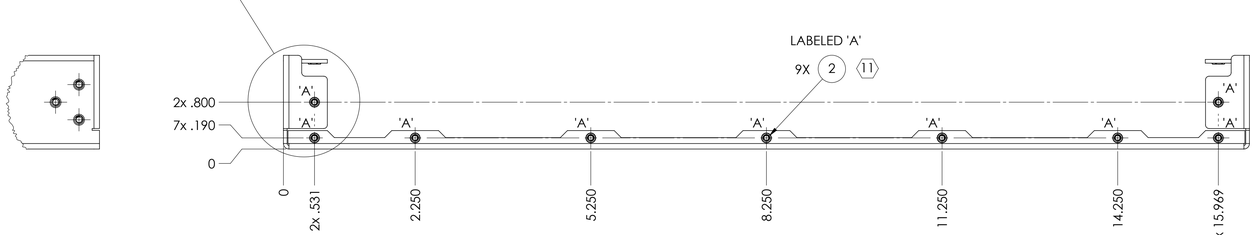

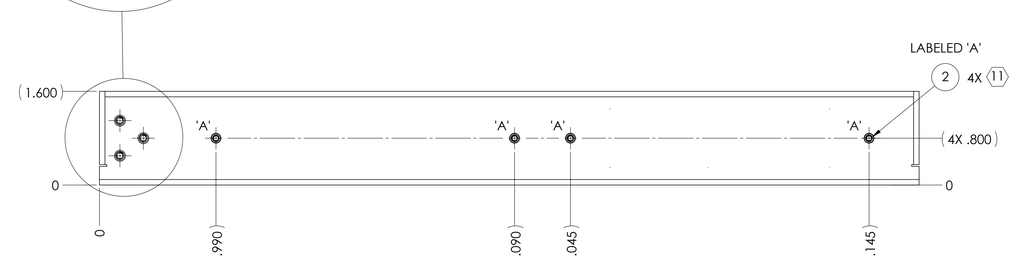

ITEM NO.	PART NUMBER	DESCRIPTION	MATERIAL	REQ
3	CLS-632-1 PEM	Press-Fit Nut, 6-32	300 SSTL	6
2	F-440-1 PEM	SELF-CLINCHING NUT, 4-40	300 SSTL	34
1	D070012	AA/AI CHASSIS, 1U	5052-H32	1

PARTS LIST

NOTES AND TOLERANCES: (UNLESS OTHERWISE SPECIFIED)

DIMENSIONS ARE IN INCHES

TOLERANCES:
.XX ± .01
.XXX ± .005

ANGULAR ± 0.5°

1. INTERPRET DRAWING PER ASME Y14.5-1994.
2. ROUND ALL EDGES APPROXIMATLEY R.02 FOR SHEET METAL PARTS.
3. DO NOT SCALE FROM DRAWING.
4. ALL MACHINING FLUIDS MUST BE FULLY SYNTHETIC, FULLY WATER SOLUBLE AND FREE OF SULFUR, SILICONE, AND CHLORINE.

MATERIAL: 5052-H32
FINISH: - µinch

LIGO — CALIFORNIA INSTITUTE OF TECHNOLOGY, MASSACHUSETTS INSTITUTE OF TECHNOLOGY

SYSTEM: A+
SUB-SYSTEM: CDS
NEXT ASSY: TBD

PART NAME: AA/AI CHASSIS, 1U

DESIGNER	-	-
DRAFTER	LDF	3.18.2010
CHECKER	SEE DCC	SEE DCC
APPROVAL	SEE DCC	SEE DCC

SIZE: E
DWG. NO.: D070012
REV.: v5
SCALE: 1:1
PROJECTION:
SHEET 1 OF 1

(REDRAWN IN CURRENT CAD FORMAT BY E.SANCHEZ, 10/08/20021)

PART PDM VERSION: v-002
DWG PDM VERSION: v-002
D070012 AA_AI CHASSIS, 1U